DWX-42W
Setup Guide

Read this first

This guide describes the setup tasks and important conditions about the installation site that must be met in order to enable use of this machine.

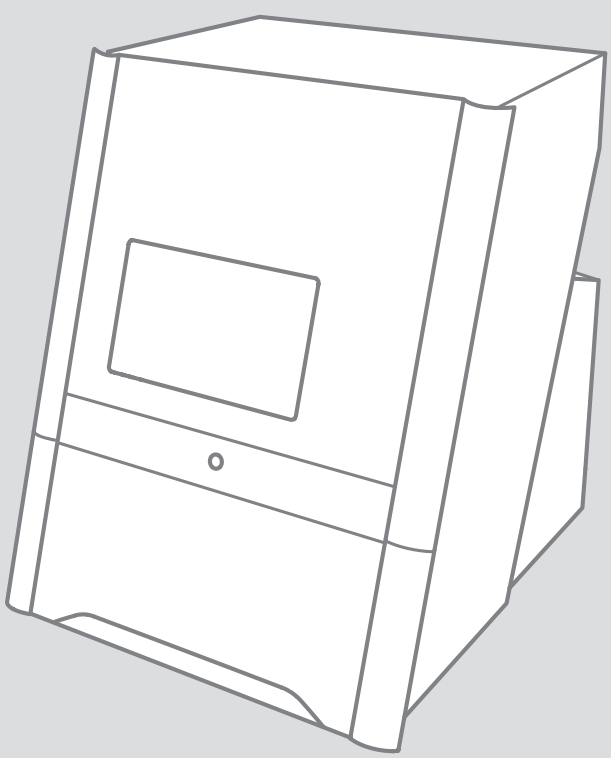

1000021528

R6-190701

DGSHAPE

Thank you very much for purchasing this product.

- To ensure correct and safe usage with a full understanding of this product's performance, please be sure to read through this manual completely and store it in a safe location.
- Unauthorized copying or transferal, in whole or in part, of this manual is prohibited.
- The contents of this operation manual and the specifications of this product are subject to change without notice.
- The operation manual and the product have been prepared and tested as much as possible. If you find any misprint or error, please inform Roland DG Corporation.
- DGSHAPE Corporation assumes no responsibility for any direct or indirect loss or damage which may occur through use of this product, regardless of any failure to perform on the part of this product.
- DGSHAPE Corporation assumes no responsibility for any direct or indirect loss or damage which may occur with respect to any article made using this product.

Applicable EMC Standards: EN 61326-1 (Class A), EN 55011 (Class A, Group 1)

This product is a Class A device.
It may generate radio wave interference when used in a residential environment. In this situation, the user may be required to implement appropriate countermeasures.

This product is a Group 1 device.
Radio frequency energies in the form of electromagnetic radiation, induction, and/or electrostatic bonding are not used nor deliberately emitted when processing material or during examination/analysis.

Company names and product names are trademarks or registered trademarks of their respective holders.

http://www.dgshape.com/

Copyright © 2018-2019 DGSHAPE Corporation

For the USA

FEDERAL COMMUNICATIONS COMMISSION RADIO FREQUENCY INTERFERENCE STATEMENT

Responsible Party: Roland DGA Corporation
Address: 15363 Barranca Parkway Irvine, CA 92618 U.S.A.
Telephone: 949-727-2100
Type of Equipment: Engraving Machine
Model Name: DWX-42W

NOTE:
This equipment has been tested and found to comply with the limits for a Class A digital device, pursuant to part 15 of the FCC Rules. These limits are designed to provide reasonable protection against harmful interference when the equipment is operated in a commercial environment. This equipment generates, uses, and can radiate radio frequency energy and, if not installed and used in accordance with the instruction manual, may cause harmful interference to radio communications. Operation of this equipment in a residential area is likely to cause harmful interference in which case the user will be required to correct the interference at his own expense.

This device complies with part 15 of the FCC Rules. Operation is subject to the following two conditions: (1) This device may not cause harmful interference, and (2) this device must accept any interference received, including interference that may cause undesired operation.

FCC CAUTION
Changes or modifications not expressly approved by the party responsible for compliance could void the user's authority to operate the equipment.

Use only I/O cables that have been designed and manufactured specifically for this device.

For California

WARNING: This product can expose you to chemicals including lead, which is known to the State of California to cause cancer and birth defects or other reproductive harm. For more information go to www.P65Warnings.ca.gov.

For Canada

CAN ICES-3 (A)/NMB-3(A)

For EU Countries

Manufacturer:
ROLAND DG CORPORATION
1-6-4 Shinmiyakoda, Kita-ku, Hamamatsu-shi, Shizuoka-ken, 431-2103 JAPAN

The importer in the EU:
Roland DG Europe Holdings B.V.
Prof. J.H. Bavincklaan 2, 1183 AT, Amstelveen, The Netherlands

NOTICE

Grounding Instructions

In the event of a malfunction or breakdown, grounding provides a path of least resistance for electric current to reduce the risk of electric shock. This tool is equipped with an electric cord having an equipment-grounding conductor and a grounding plug. The plug must be plugged into a matching outlet that is properly installed and grounded in accordance with all local codes and ordinances.

Do not modify the plug provided - if it will not fit the outlet, have the proper outlet installed by a qualified electrician.

Improper connection of the equipment-grounding conductor can result in a risk of electric shock. The conductor with insulation having an outer surface that is green with or without yellow stripes is the equipment-grounding conductor. If repair or replacement of the electric cord or plug is necessary, do not connect the equipment-grounding conductor to a live terminal.

Check with a qualified electrician or service personnel if the grounding instructions are not completely understood, or if in doubt as to whether the tool is properly grounded.

Use only 3-wire extension cords that have 3-prong grounding plugs and 3-pole receptacles that accept the tool's plug.

Repair or replace damaged or worn cord immediately.

Operating Instructions

KEEP GUARDS IN PLACE and in working order.

MAKE WORKSHOP KID PROOF with padlocks, master switches, or by removing starker keys.

DON'T OVERREACH. Keep proper footing and balance at all times.

DISCONNECT TOOLS before servicing; when changing accessories, such as blades, bits, cutters, and the like.

REDUCE THE RISK OF UNINTENTIONAL STARTING. Make sure switch is in off position before plugging in.

NEVER STAND ON TOOL. Serious injury could occur if the tool is tipped or if the cutting tool is unintentionally contacted.

CHECK DAMAGED PARTS. Before further use of the tool, a guard or other part that is damaged should be carefully checked to determine that it will operate properly and perform its intended function - check for alignment of moving parts, binding of moving parts, breakage of parts, mounting, and any other conditions that may affect its operation. A guard or other part that is damaged should be properly repaired or replaced.

NEVER LEAVE TOOL RUNNING UNATTENDED. TURN POWER OFF. Don't leave tool until it comes to a complete stop.

USE POWER SUPPLY CORD WHICH IS ATTACHED WITH PRODUCTS. do not use other power supply cord.

Contents

Contents 2
To Ensure Safe Use 4
Pour utiliser en toute sécurité 12
Important Notes on Handling and Use 20

1. Getting Started 21

About This Machine 22
Features of This Machine 22
Documentation Included with the Machine 22
Checking the Part Names and Included Items 23
Part Names and Functions 23
Checking the Included Items 27
Detection Pin for Correction 28
Items to Prepare Yourself 29
Items to Prepare Yourself 29
Water (Soft or Purified Water) 29
Source of Compressed Air (Compressor) 29
Air Hose 30
Fluid Receptacle 30
Additive (ZAW-1000D) 31
Chelating Reagent (ZCH-250D) 31

2. Installation and Setup 33

1. Installation 34
Step 1 : Deciding on an Installation Site 34
Step 2 : Removing the Retainers 36
Step 3 : Attaching the Regulator 37
Step 4 : Attaching the Garbage Receptacle 42
2. Connecting to the Computer 43
Procedure Overview 43
Step 1 : Installing the Software 44
Step 2 : Connecting the USB Cable 47
Step 3 : Switching the Power On 48
Step 4 : Selecting the Machine to Connect To 50
Step 5 : Determining the LAN Address 51
Step 6 : Setting the Computer's Network 52
Step 7 : Setting the Machine's Network 54
Step 8 : Disconnecting the USB Cable 56
Step 9 : Connecting the LAN Cable 56
Step 10 : Selecting the Machine to Connect To 58
3. Performing the Initial Work 61
Initial Work 61
Step 1 : Filling the Coolant Tank 61
Step 2 : Automatic Correction 68
Step 3 : Spindle Run-In (Long) 73

3. Appendix 77

Specifications 78

Power Rating and Serial Number Location 78

Coordinates 78

Dimensional Drawings 79

Specifications 81

To Ensure Safe Use

Improper handling or operation of this machine may result in injury or damage to property. Points which must be observed to prevent such injury or damage are described as follows.

About ⚠ WARNING and ⚠ CAUTION Notices

⚠ **WARNING**	Used for instructions intended to alert the user to the risk of death or severe injury should the unit be used improperly.
⚠ **CAUTION**	Used for instructions intended to alert the user to the risk of injury or material damage should the unit be used improperly. * Material damage refers to damage or other adverse effects caused with respect to the home and all its furnishings, as well as to domestic animals or pets.

About the Symbols

	The △ symbol alerts the user to important instructions or warnings. The specific meaning of the symbol is determined by the design contained within the △ symbol. The symbol at left means “danger of electrical shock.”
	The ⃠ symbol alerts the user to items that must never be carried out (are forbidden). The specific meaning of the symbol is determined by the design contained within the ⃠ symbol. The symbol at left means the unit must never be disassembled.
	The ● symbol alerts the user to things that must be carried out. The specific meaning of the symbol is determined by the design contained within the ● symbol. The symbol at left means the power-cord plug must be unplugged from the outlet.

⚠ This is a heavy machine

⚠ CAUTION

Unloading and emplacement are operations that must be performed by 2 persons or more.
Tasks that require undue effort when performed by a small number of persons may result in physical injury. Also, if dropped, such items may cause injury.

⚠ CAUTION

Install in a level and stable location.
Failure to do so may result in falling of the machine, leading to injury.

⚠ Incorrect operation may cause injury

⚠ WARNING



Always unplug the power cord when attaching or removing parts and optional parts and when performing maintenance that does not require the machine to be connected to a power source.
Attempting such operations while the machine is connected to a power source may result in injury or electrical shock.



Keep children away from the machine.
The machine includes areas and components that pose a hazard to children and may result in injury, blindness, choking, or other serious accident.



Never attempt to disassemble, repair, or modify the machine.
Doing so may result in fire, electrical shock, or injury. Entrust repairs to a trained service technician.



Be sure to follow the operation procedures described in the user's manual. Never allow anyone unfamiliar with the usage or handling of the machine to touch it.
Incorrect usage or handling may lead to an accident.



Never operate the machine while tired or after ingesting alcohol or any medication.
Operation requires unimpaired judgment. Operating with impaired judgment may result in an accident.



Conduct operations in a clean, brightly lit location.
Working in a location that is dark or cluttered may lead to an accident, such as becoming caught in the machine as the result of an inadvertent stumble.



Never climb or lean on the machine.
The machine is not made to support a person. Climbing or leaning on the machine may dislodge components and cause a slip or fall, resulting in injury.

⚠ WARNING



Be careful around the milling tool.
The milling tool is sharp. Broken milling tools are also dangerous. To avoid injury, exercise caution.



Never use a milling tool that has become dull. Perform frequent maintenance to keep the machine in good working order.
Inappropriate usage may result in fire or injury.



Never operate the machine if the cover is cracked or broken.
Doing so may result in injury. If the cover is cracked or broken, contact your authorized Roland DG Corporation dealer.



Be careful of the pointed portion inside the front cover.
There is a pointed portion inside the front cover. Exercise caution when cleaning.

⚠ CAUTION



Use a dry cloth to clean the inside of the equipment.
Failure to do so may cause the components inside the equipment to degrade, which can lead to injury.



Wipe up any water around the main unit.
Failure to do so may cause a slip or fall, resulting in injury.

⚠ Milling waste and workpieces are flammable and toxic.

⚠ WARNING

Never attempt to mill magnesium or any other such flammable material.
Fire may occur during milling.

Keep open flame away from the work area.
Milling waste may ignite. Powdered material is extremely flammable, and even metal material may catch fire.

Never use a vacuum cleaner to clean up milling waste.
Picking up fine cuttings using an ordinary vacuum cleaner may result in fire or explosion.

⚠ CAUTION

Wear dust goggles and a mask. Wash away any milling waste remaining on the hands.
Accidentally swallowing or inhaling milling waste may be hazardous to your health.

⚠ Danger of pinching, entanglement, and burns

⚠ WARNING

Securely fasten the milling tool and workpiece in place. After securing in place, make sure no spanners or other articles have been left behind inadvertently.
Otherwise, such articles may be thrown from the machine with force, posing a risk of injury.

Do not touch the spindle unit or the surrounding areas immediately after milling has ended.
Doing so may result in burns.

⚠ CAUTION

Never attempt operation while wearing a necktie, necklace, or loose clothing. Bind long hair securely. When performing operations while wearing gloves, exercise sufficient caution to prevent entanglement in the machine.
Such items may become caught in the machine, resulting in injury.

⚠ CAUTION

Do not use hot water for the coolant.
Using hot water may cause burns.

When opening or closing the front cover, hold the part indicated in the following figure with both hands.
Failing to do so may result in your fingers being pinched, leading to injury.

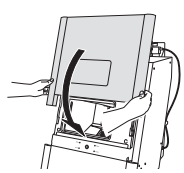

When raising or lowering the coolant tank, hold the parts indicated in the following figure.
Failing to do so may result in your fingers being pinched, leading to injury.



⚠ Danger of electrical short, electrical shock, or fire

⚠ WARNING

Connect to an electrical outlet that complies with this machine's ratings (for voltage, frequency, and current).
Incorrect voltage or insufficient current may cause fire or electrical shock.

If sparking, smoke, burning odor, unusual sound, or abnormal operation occur, immediately unplug the power cord. Never use if any component is damaged.
Continuing to use the machine may result in fire, electrical shock, or injury. Contact your authorized Roland DG Corporation dealer.



Never use outside or in any location where exposure to water or high humidity may occur. Do not touch the power cord, plug, or electrical outlet with wet hands.
Doing so may result in fire or electrical shock.

Never allow any foreign object to get inside. Never expose the machine to liquid spills.
Inserting objects such as coins or matches or allowing beverages to be spilled into the ventilation ports may result in fire or electrical shock. If anything gets inside, immediately disconnect the power cord and contact your authorized Roland DG Corporation dealer.

Never place any flammable object nearby. Never use a combustible aerosol spray nearby. Never use in a location where gases can accumulate.
Combustion or explosion colud occur.

Handle the power cord, plug, and electrical outlet correctly and with care. Never use any article that is damaged.
Using a damaged article may result in fire or electrical shock.

When using an extension cord or power strip, use one that adequately satisfies the machine's ratings (for voltage, frequency, and current).
Use of multiple electrical loads on a single electrical outlet or of a lengthy extension cord may cause fire.

⚠ WARNING

Position the machine so that the power plug is within immediate reach at all times.
This is to enable quick disconnection of the power plug in the event of an emergency. Install the machine next to an electrical outlet. Also, provide enough empty space to allow immediate access to the electrical outlet.

For accessories (optional and consumable items, power cord, and the like), use only genuine articles compatible with this machine.
Incompatible items may lead to an accident.

Never use the machine for any purpose for which it is not intended, or use the machine in an excessive manner that exceeds its capacity.
Doing so may result in injury or fire.

Do not use the supplied power cord for other products.

If the machine will not be used for a long period, disconnect the power cord.
This prevents an accident caused by unexpected electric leakage or unintentional start of the machine.

Connect to ground.
This can prevent fire or electrical shock due to current leakage in the event of a malfunction.

Never use cutting oil.
This machine is not designed for the flow of cutting oil. Oil may get inside the machine and cause fire or electrical shock.

Never use a pneumatic blower.
This machine is not compatible with a pneumatic blower. Milling waste may get inside the machine and cause fire or electrical shock.

⚠ WARNING

Handle the coolant filter carefully.
Dropping the filter or grasping it too strongly may damage the filter. If the filtration function does not work due to damage, the line may be clogged with milling waste, which may lead to coolant leaks and fire and electrical shock due to current leakage.

Use a dry cloth when cleaning silicone resin parts, and be careful to prevent the silicone resin from being damaged.
The silicone resin being damaged may lead to electric leakage.

⚠ WARNING

Do not place any electronic devices in the vicinity of this machine.
Because coolant flows within this machine, water may be sprayed on objects in the vicinity of the machine when its front cover is opened. To prevent malfunctions, do not place any electronic devices in the vicinity of this machine.

⚠ Important notes about the power cord, plug, and electrical outlet

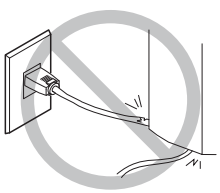

Never place any object on top or subject to damage.

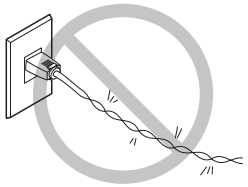

Never bend or twist with undue force.

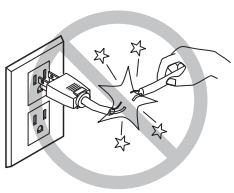

Never pull with undue force.

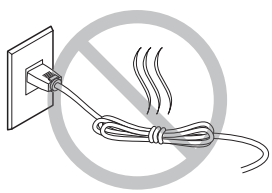

Never bundle, bind, or roll up.

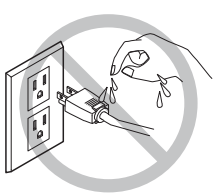

Never allow to get wet.

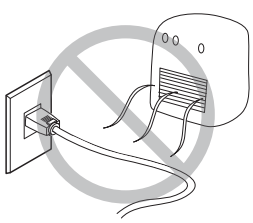

Never make hot.

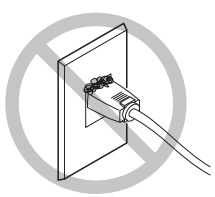

Dust may cause fire.

⚠ Danger of components flying off or becoming damaged

⚠ WARNING

Ensure that the supplied compressed air is not contaminated by water, oil, chemicals, or foreign objects.
The components may deteriorate or rupture, or the contaminants may be scattered, posing a hazard.

Never use in a location exposed to cutting oil, solvents, chemicals, or other such substances.
Components may deteriorate or rupture under the pressure of compressed air.

Never use in a location exposed to direct sunlight.
Components may deteriorate or rupture under the pressure of compressed air.

Keep the temperature of the installation area within the specified range. Never place a stove or heater nearby.
Components may deteriorate or rupture under the pressure of compressed air.

Connect the air hose securely, so that it will not come loose.
A pressurized hose that comes loose may whip about uncontrolled, posing a hazard. Connect securely.

Before attempting to attach or detach the air hose or optional items or before attempting to perform cleaning or maintenance that does not require the machine to be connected to a power source, stop the supply of compressed air and allow the pressure to escape.
Allowing the equipment to remain under pressure poses a hazard of flying components.

Use an air hose of the specified diameter and having adequate pressure resistance.
Otherwise the article may come loose or rupture.

Keep the supply of compressed air within the specified pressure range.
Exceeding the specified pressure may result in a rupture or other major accident.

⚠ WARNING

Never strike or subject the object to impact.
Components may suffer damage or rupture under the pressure of compressed air.

When the machine will be out of use for a prolonged period, stop supply of compressed air and bleed off the air pressure.
This can prevent an accident.

Never damage the air hose, or bend or twist it with undue force. Never use an item that has deteriorated.
A damaged air hose may rupture.

Be sure to bleed off the air pressure before removing the regulator bowl.
Failure to do so may result in a rupture or components flying off.

Clean the regulator bowl using a neutral detergent. Never use solvents such as gasoline, alcohol, or thinner.
Using solvents may degrade the bowl and may result in a rupture.

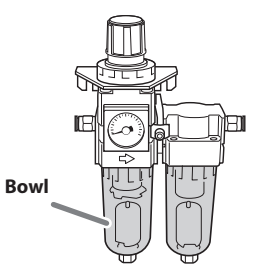

⚠ Important notes about the end (cut edge) of the air hose

Failure to observe these cautions may result in air leakage or easy dislodgement of the air hose. Also, when a hose has been detached, cut off the end before reattaching the hose.

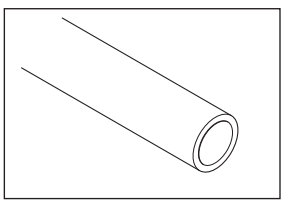

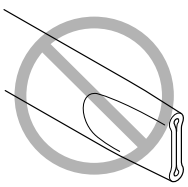

Ensure that it is not crushed.

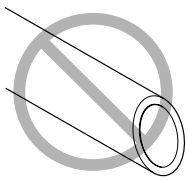

Make the cut edge straight.

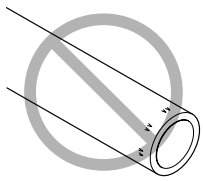

Keep free of damage and soiling.

⚠ Additives and coolant are toxic

⚠ WARNING

Never drink or sniff the additives or coolant or allow them to come in contact with the eyes or skin.
Doing so may be hazardous to your health.

⚠ WARNING

After milling, wash away any products with purified water or the like.
After milling, there will be coolant on the product. Using the product as is may cause an inflammation or the like.

In the event of ingestion or physical distress

- In the event of contact with the eyes, immediately flush with water for at least 15 minutes. If eye irritation continues, seek treatment by a physician.
- In the event of contact with skin, immediately wash with soap. If irritation or inflammation occurs, seek treatment by a physician.
- In the event of ingestion, do not induce vomiting, and immediately seek treatment by a physician. Forcibly inducing vomiting may lead to danger of choking.
- If odor leads to physical distress, move to a well-ventilated location and rest quietly. If dizziness or nausea persists, seek treatment by a physician.

➢ Refer to the appropriate safety data sheet (SDS) for the chemical substances used in the grease and the safety related to those substances.

➢ Refer to the appropriate safety data sheet (SDS) for the chemical substances used in the additives and the safety related to those substances.

⚠ Handle the machine with care

⚠ CAUTION

Do not overfill or tilt the coolant tank.
The fluid inlet on the coolant tank is open. Overfilling or tilting will cause fluid to spill out.

⚠ CAUTION

Be sure to put the specified additive in the coolant tank.
Additives are effective in reducing coolant deterioration and raising the milling efficiency in order to maintain product performance.
If additives are not used, the coolant may generate an unpleasant odor.

⚠ Warning labels

Warning labels are affixed to make areas of danger immediately clear. The meanings of these labels are as follows. Be sure to heed their warnings. Also, never remove the labels or allow them to become obscured.

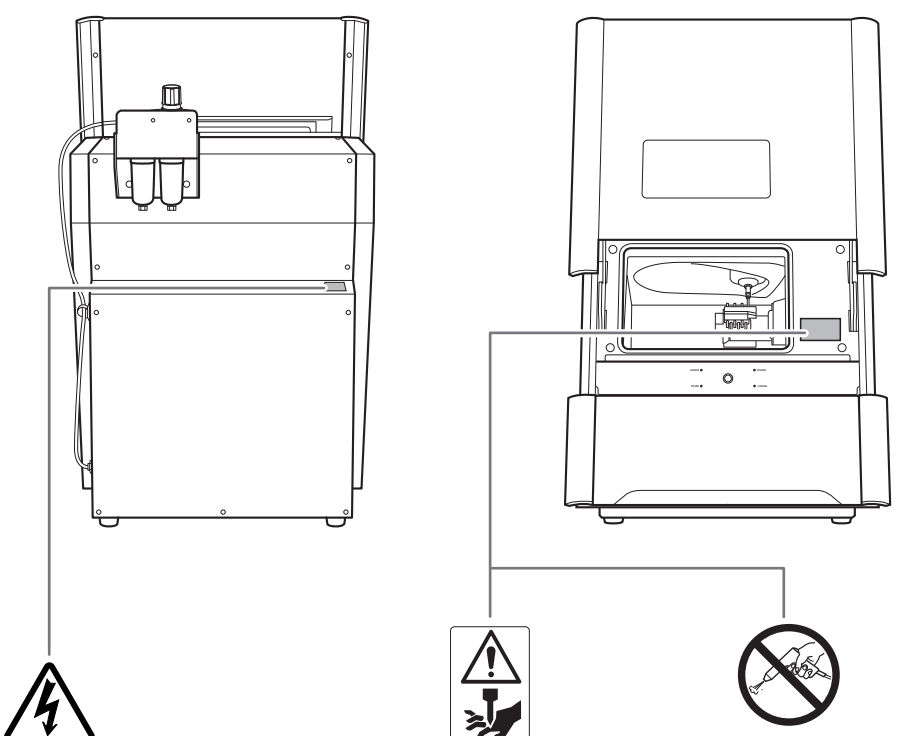

Caution: High Voltage
Removing the cover may result in high-voltage electrical shock.

Caution: Sharp Tool
The milling tool is sharp. Inadvertent contact may cause injury.

Never use a pneumatic blower.
This machine is not compatible with a pneumatic blower. Milling waste may get inside the machine and cause fire or electrical shock.

Pour utiliser en toute sécurité

La manipulation ou l'utilisation inadéquates de cet appareil peuvent causer des blessures ou des dommages matériels. Les précautions à prendre pour prévenir les blessures ou les dommages sont décrites ci-dessous.

⚠ Avis sur les ⚠ avertissements

⚠ **ATTENTION**	Utilisé pour avertir l'utilisateur d'un risque de décès ou de blessure grave en cas de mauvaise utilisation de l'appareil.
⚠ **PRUDENCE**	Utilisé pour avertir l'utilisateur d'un risque de blessure ou de dommage matériel en cas de mauvaise utilisation de l'appareil. * Par dommage matériel, il est entendu dommage ou tout autre effet indésirable sur la maison, tous les meubles et même les animaux domestiques.

À propos des symboles

	Le symbole △ attire l'attention de l'utilisateur sur les instructions importantes ou les avertissements. Le sens précis du △ symbole est déterminé par le dessin à l'intérieur du triangle. Le symbole à gauche signifie « danger d'électrocution ».
	Le symbole ⃠ avertit l'utilisateur de ce qu'il ne doit pas faire, ce qui est interdit. Le sens précis du ⃠ symbole est déterminé par le dessin à l'intérieur du triangle. Le symbole à gauche signifie que l'appareil ne doit jamais être démonté.
	Le symbole ● prévient l'utilisateur sur ce qu'il doit faire. Le sens précis du ● symbole est déterminé par le dessin à l'intérieur du triangle. Le symbole à gauche signifie que le fil électrique doit être débranché de la prise.

⚠ Cet appareil est lourd

⚠ PRUDENCE

Le déchargement et la mise en place doivent être faits par au moins deux personnes.
Les tâches qui exigent un effort trop grand si elles sont exécutées par un petit nombre de personnes peuvent être cause de blessures. La chute d'articles très lourds peut aussi causer des blessures.

⚠ PRUDENCE

Installer l'appareil à un endroit stable et plat.
Installer l'appareil à un endroit inapproprié peut provoquer un accident grave comme le renversement ou la chute.

⚠ L'utilisation incorrecte peut causer des blessures

⚠ ATTENTION

Toujours débrancher le câble d'alimentation lors de la fixation ou du retrait de pièces et de pièces en option et du nettoyage ou des travaux d'entretien qui n'exigent pas un branchement de l'appareil à une source d'alimentation.
Tenter ces opérations pendant que l'appareil est branché à une source d'alimentation peut causer des blessures ou un choc électrique.

Garder les enfants loin de l'appareil.
L'appareil comporte des zones et des composants qui présentent un danger pour les enfants et qui pourraient causer des blessures, la cécité, la suffocation ou d'autres accidents graves.

Ne jamais tenter de démonter, de réparer ou de odifier l'appareil.
Le non-respect de cette consigne risque de provoquer un incendie, un choc électrique ou des blessures. Confier les réparations à un technicien ayant la formation requise.

S'assurer de suivre les procédures d'utilisation décrites dans le manuel utilisateur. Ne jamais permettre à quiconque ne connaît pas le fonctionnement ou la manutention de l'appareil de le toucher.
L'utilisation ou la manutention incorrectes peuvent causer un accident.

Ne jamais faire fonctionner l'appareil après avoir consommé de l'alcool ou des médicaments, ou dans un état de fatigue.
L'utilisation de l'appareil exige un jugement sans faille. L'utilisation avec les facultés affaiblies pourrait entraîner un accident.

Utiliser l'appareil dans un endroit propre et bien éclairé.
Travailler dans un endroit sombre ou encombré peut causer un accident; l'utilisateur risque, par exemple, de trébucher malencontreusement et d'être coincé par une partie de l'appareil.

⚠ ATTENTION

Ne jamais grimper ni s'appuyer sur la machine.
La machine n'est pas conçue pour supporter le poids d'une personne. Grimper ou s'appuyer sur la machine peut déplacer des éléments et causer un faux pas ou une chute, ce qui causerait des blessures.

Être attentif dans le périmètre de l'outil de coupe.
L'outil de coupe est acéré. Les outils de coupes brisés sont aussi dangereux. Faire preuve de prudence pour éviter les blessures.

Ne jamais utiliser un outil de coupe émoussé. Procéder fréquemment aux travaux d'entretien pour garder l'appareil en bon état de fonctionnement.
L'usage inapproprié peut causer un incendie ou des blessures.

Ne pas utiliser si un couvercle avant est fissuré ou brisé.
Vous risqueriez de vous blesser.
Si le couvercle est fissuré ou brisé, communiquer avec le représentant Roland DG Corporation autorisé.

Faire attention à la section pointue à l'intérieur du couvercle avant.
Vous trouverez une section pointue à l'intérieur du couvercle avant. Soyez prudent au moment du nettoyage.

⚠ PRUDENCE

Utiliser un chiffon sec pour nettoyer l'intérieur de l'équipement.
Le non-respect de cette consigne peut provoquer la dégradation de composants à l'intérieur de l'équipement, qui peut entraîner une blessure.

Sécher toute présence d'eau dans le périmètre du groupe principal.
Si vous ne le faites pas, vous risquez de glisser ou tomber et de vous blesser.

⚠ Les rebuts et morceaux de la coupe sont inflammables et toxiques.

⚠ ATTENTION

Ne jamais tenter de couper du magnésium ni aucun autre matériau inflammable.
Un incendie pourrait se produire pendant la coupe.

Ne pas approcher une flamme nue del'espace de travail.
Les rognures de coupe peuvent s'enflammer. Les matériaux pulvérisés sont extrêmement inflammables et même le métal peut s'enflammer.

Ne jamais utiliser un aspirateur pour aspirer des rognures de coupe.
L'utilisation d'un aspirateur normal pour aspirer des rognures finement coupées peut entraîner un risque d'incendie ou d'explosion.

⚠ PRUDENCE

Porter des lunettes de protection et un masque. Rincer toutes les rognures de coupe qui pourraient rester collées aux mains.
Ingérer ou respirer accidentellement des rognures de coupe peut être dangereux pour la santé.

⚠ Certains éléments peuvent présenter un risque de pincement, d'emmêlement, de brûlure ou d'autres dangers.

⚠ ATTENTION

Fixer solidement l'outil de coupe et la pièce à travailler. Une fois qu'ils sont fixés solidement, s'assurer qu'aucun outil ni aucun autre objet n'a été laissé en place.
Si tel était le cas, ces objets pourraient être projetés avec force hors de l'appareil et causer des blessures

Ne touchez pas l'unité de broche ou les zones environnantes immédiatement après la fin de la mouture.
Cela pourrait entraîner des brûlures.

⚠ PRUDENCE

Ne jamais utiliser l'appareil avec des cravates, des colliers ou des vêtements amples. Les cheveux longs doivent être solidement attachés. Lors du fonctionnement de l'appareil et tout en portant des gants, faire preuve d'assez de prudence pour prévenir l'emmêlement dans l'appareil.
Tous ces objets peuvent être attrapés dans l'appareil, risquant de provoquer des blessures.

⚠ PRUDENCE

Ne pas utiliser d'eau chaude pour le liquide de refroidissement.
L'eau chaude peut entraîner des brûlures.

Lors l'ouverture ou de la fermeture du couvercle avant, tenir la pièce indiquée à la figure suivante avec les deux mains.
Le non-respect de cette consigne peut mener au pincement de vos doigts et entraîner une blessure.

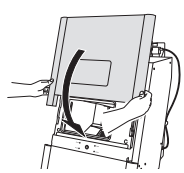

Tenir les pièces indiquées à la figure suivante en soulevant ou abaissant le réservoir de liquide de refroidissement.
Le non-respect de cette consigne peut mener au pincement de vos doigts et entraîner une blessure.

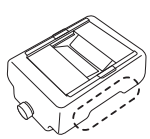

⚠ Risque de décharge ou de choc électrique, d'électrocution ou d'incendie

⚠ ATTENTION



Brancher à une prise électrique conforme aux caractéristiques de cet appareil (tension, fréquence et courant).
Une tension incorrecte ou un courant insuffisant peuvent causer un incendie ou un choc électrique.



S'il se produit des étincelles, de la fumée, une odeur de brûlé, un bruit inhabituel ou un fonctionnement anormal, débrancher immédiatement le câble d'alimentation. Ne jamais utiliser si un composant est endommagé.
Continuer à utiliser l'appareil peut causer un incendie, un choc électrique ou des blessures. Communiquer avec le représentant Roland DG Corporation Autorisé.



Ne jamais utiliser à l'extérieur ni à un endroit où l'appareil risque d'être exposé à de l'eau ou à une humidité élevée. Ne pas toucher le câble d'alimentation, la fiche ou la prise électrique avec des mains mouillées.
Le non-respect de cette consigne risque de provoquer un incendie ou un choc électrique.



Ne jamais insérer d'objet étranger dans l'appareil. Ne jamais exposer l'appareil aux déversements de liquides.
L'insertion d'objets comme des pièces de monnaie ou des allumettes, ou le déversement de liquides dans les orifices de ventilation peuvent causer un incendie ou un choc électrique. Si un objet ou du liquide s'infiltre dans l'appareil, débrancher immédiatement le câble d'alimentation et communiquer avec le représentant Roland DG Corporation autorisé.



Ne jamais placer d'objet inflammable à proximité de l'appareil. Ne jamais utiliser de produit inflammable en aérosol à proximité de l'appareil. Ne jamais utiliser l'appareil dans un endroit où des gaz peuvent s'accumuler.
Une combustion ou une explosion pourraient se produire.



Manipuler le câble d'alimentation, la fiche et la prise électrique correctement et avec soin.
Ne jamais utiliser un article endommagé, car cela pourrait causer un incendie ou un choc électrique.

⚠ ATTENTION



Si une rallonge ou une bande d'alimentation électrique sont utilisées, s'assurer qu'elles correspondent aux caractéristiques de l'appareil (tension, fréquence et courant).
L'utilisation de plusieurs charges électriques sur une prise unique ou une longue rallonge peut causer un incendie.



Placer l'appareil de façon à ce que la fiche soit facile d'accès en tout temps.
Ainsi, l'appareil pourra être débranché rapidement en cas d'urgence. Installer l'appareil près d'une prise électrique. En outre, prévoir suffisamment d'espace pour que la prise électrique soit facile d'accès.



Utiliser uniquement des accessoires d'origine (accessoires en option, articles consommables, câble d'alimentation et autres articles semblables), compatibles avec l'appareil.
Les articles incompatibles risquent de causer des accidents.



Ne jamais utiliser l'appareil à des fins autres que celles pour lesquelles il est conçu. Ne jamais l'utiliser de manière abusive ou excessive.
Le non-respect de cette consigne peut causer des blessures ou un incendie.



Ne pas utiliser le cordon électrique fourni avec d'autres produits.



Si l'appareil doit rester inutilisé pendant une longue période, débrancher le câble d'alimentation.
Cela peut prévenir les accidents en cas de fuite de courant ou de démarrage accidentel.



Mise à la terre.
La mise à la terre peut prévenir un incendie ou un choc électrique dus à une fuite de courant en cas de défaillance.



Ne jamais utiliser d'huile de coupe.
Cet appareil n'est pas conçu pour traiter l'huile de coupe. L'huile peut s'infiltrer à l'intérieur et causer un incendie ou un choc électrique.



Ne jamais utiliser d'air sous pression.
Cet appareil n'est pas conçu pour être nettoyé à l'aide d'un appareil soufflant. Des rognures de coupe peuvent s'infiltrer à l'intérieur et causer un incendie ou un choc électrique.

⚠ ATTENTION

Manipuler le filtre à liquide de refroidissement avec soins.
Échapper le filtre ou le saisir trop vigoureusement peut l'endommager. Si la filtration ne fonctionne pas en raison d'un dommage, la conduite peut s'obstruer avec des rognures de coupe, qui peut à son tour mener à des fuites de liquide de refroidissement et à un incendie et des chocs électriques entraînés par une perte de courant.

Utiliser un chiffon sec pour nettoyer les pièces avec de la résine de silicone. Exercer de la prudence pour empêcher tout dommage à la résine de silicone.
Une résine de silicone endommagée peut mener à une fuite de courant.

⚠ ATTENTION

Ne pas placer de dispositifs électroniques à proximité de cet appareil.
Puisque du liquide de refroidissement circule dans l'appareil, de l'eau peut éclabousser les objets à proximité de l'appareil lorsque le couvercle avant est ouvert. Ne pas placer de dispositifs électroniques à proximité de cet appareil pour prévenir toute défaillance.

⚠ Remarques importantes à propos du câble d'alimentation, de la fiche et de la prise électrique

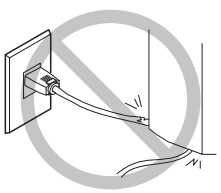

Ne jamais déposer aucun objet dessus au risque de les endommager.

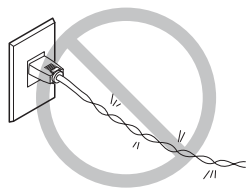

Ne jamais plier ni tordre avec une force excessive.



Ne jamais tirer avec une force excessive.

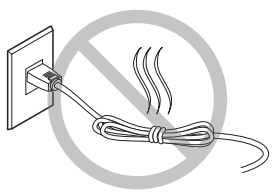

Ne jamais plier ni enrouler.

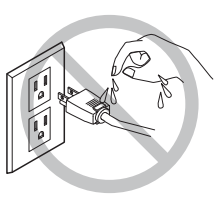

Ne jamais laisser mouiller.

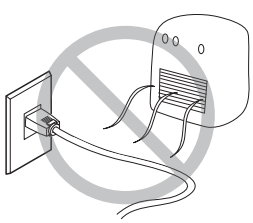

Ne jamais chauffer.

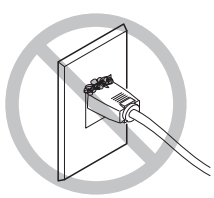

La poussière peut causer un incendie.

⚠ Composants risquant d'être éjectés ou endommagés

⚠ ATTENTION

S'assurer que l'air comprimé n'est pas contaminé par de l'eau, de l'huile, des produits chimiques ou des objets étrangers.
Les composants pourraient se détériorer ou se rompre et les contaminants pourraient être projetés; cela représente un risque.

Ne jamais utiliser dans un endroit exposé à de l'huile de coupe, à des solvants, à des produits chimiques ou à d'autres substances similaires.
Les composants pourraient se détériorer ou se rompre sous la pression de l'air comprimé.

Ne jamais utiliser dans un endroit exposé directement aux rayons du soleil.
Les composants pourraient se détériorer ou se rompre sous la pression de l'air comprimé.

Garder la température de l'endroit où l'appareil est installé dans les limites spécifiées. Ne jamais placer un four ou un appareil de chauffage à proximité.
Les composants pourraient se détériorer ou se rompre sous la pression de l'air comprimé.

Connecter solidement le tuyau à air pour éviter qu'il se détache.
Un tuyau sous pression qui se détache peut fouetter l'air de manière désordonnée et créer une situation dangereuse. Le fixer solidement.

Avant de fixer ou de retirer le tuyau à air ou des accessoires en option ou avant de procéder au nettoyage ou à un entretien qui n'exige pas un branchement de l'appareil à une source d'alimentation, couper l'arrivée d'air comprimé et laisser la pression s'échapper.
Si l'équipement est laissé sous pression, il y a risque que des éléments soient projetés.

Utiliser un tuyau à air du diamètre spécifié et ayant une résistance appropriée à la pression.
Sinon, le tuyau risque de se détacher ou de se rompre.

⚠ ATTENTION

Garder l'alimentation en air comprimé à la pression spécifiée.
Appliquer une pression supérieure à la pression spécifiée risque de faire rompre le tuyau ou de causer un accident grave.

Ne jamais frapper ni soumettre l'objet à un impact.
Les composants pourraient être endommagés ou se rompre sous la pression de l'air comprimé.

Si l'appareil doit rester inutilisé pendant une longue période, couper l'alimentation en air comprimé et purger la pression.
Cette précaution peut prévenir un accident.

Ne jamais endommager le tuyau à air, le plier ou le tordre avec une force excessive. Ne jamais utiliser un article détérioré.
Un tuyau à air endommagé risque de se rompre.

Purger la pression d'air avant de retirer la cuvette du régulateur.
Le non-respect de cette consigne peut entraîner un éclatement ou la projection de composants.

Nettoyer la cuvette du régulateur avec un détergent neutre. Ne jamais utiliser de solvants comme de l'essence, de l'alcool ou de diluant.
Ils risquent de dégrader la cuvette et peuvent entraîner un éclatement.

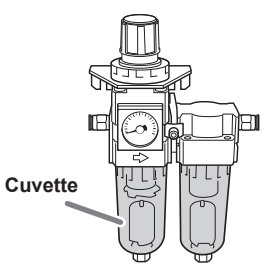

⚠ Remarques importantes relativement à l'extrémité (bord coupé) du tuyau à air.

Le non-respect de ces consignes de sécurité peut causer une fuite d'air ou le débranchement du tuyau à air. En outre, si le tuyau à air a été débranché, en couper l'extrémité avant de le rebrancher.

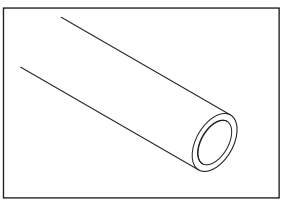

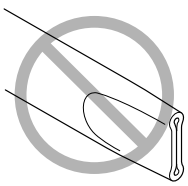

S'assurer qu'il n'est pas écrasé

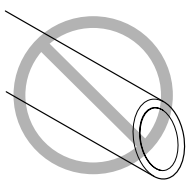

Le bord coupé doit être droit

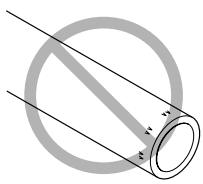

Le garder en bon état et propre

⚠ Risque de Les additifs et le liquide de refroidissement sont toxiques.

⚠ ATTENTION

Ne jamais boire ni renifler les additifs ou le liquide de refroidissement ou d'être en contact oculaire ou cutanée avec ceux-ci.
Ces actions peuvent nuire à la santé.

⚠ ATTENTION

Après la coupe, laver tout résidu de produit avec de l'eau purifiée ou un produit de même nature.
Après la coupe, le produit sera enduit de liquide de refroidissement. L'utilisation du produit dans cet état peut provoquer une inflammation ou une réaction de même nature.

En cas d'ingestion ou de détresse physique

- En cas de contact avec les yeux : rincer immédiatement et abondamment à l'eau courante pendant au moins 15 minutes. Si les yeux sont toujours irrités, consulter un médecin.
- En cas de contact avec la peau : laver immédiatement à l'eau et au savon. En cas d'irritation ou d'inflammation de la peau : consulter un médecin.
- En cas d'ingestion : ne pas provoquer le vomissement et demander immédiatement l'aide d'un médecin. Provoquer le vomissement peut créer un risque de suffocation.
- Si l'odeur cause un trouble physique, amener la personne dans un endroit bien aéré et la faire se reposer. Si l'étourdissement ou la nausée persistent, consulter un médecin.

➢ Se reporter à la fiches signalétique (FS) appropriée pour connaître les produits chimiques utilisés dans la graisse et les mesures de sécurité pour ces substances.

➢ Se reporter à la fiches signalétique (FS) appropriée pour connaître les produits chimiques utilisés dans les additifs et les mesures de sécurité pour ces substances.

⚠ Manipuler l'appareil avec soins

⚠ PRUDENCE

Ne pas trop remplir ni incliner le réservoir de liquide de refroidissement.
L'orifice de remplissage du réservoir de liquide de refroidissement est ouvert. Trop remplir ou incliner le réservoir pourra entraîner un déversement de liquide.

⚠ PRUDENCE

S'assurer d'ajouter l'additif précisé dans le réservoir de liquide de refroidissement.
Les additifs sont efficaces pour réduire la détérioration du liquide de refroidissement et d'améliorer l'efficacité de coupe pour maintenir le rendement du produit. Sans additifs, le liquide de refroidissement peut dégager une odeur désagréable.

⚠ Vignettes d'avertissement

Des vignettes d'avertissement sont apposées pour qu'il soit facile de repérer les zones dangereuses. La signification des vignettes est donnée ci-dessous. Respecter les avertissements. Ne jamais retirer les vignettes et ne pas les laisser s'encrasser.

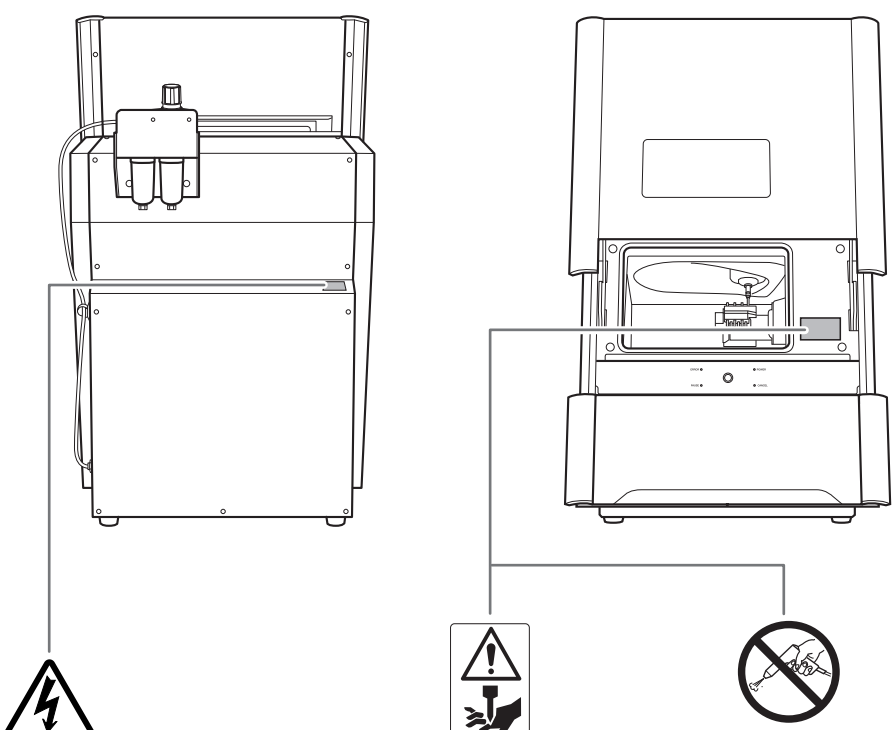

Attention : voltage télevé
Il peut être dangereux de retirer le couvercle puisqu'il y aurait des risques de chocs électriques à cause du voltage élevé.

Attention : outil coupant
L'outil de coupe est acéré. L'utilisation incorrecte peut causer des blessures

Ne jamais utiliser d'air sous pression.
Cet appareil n'est pas conçu pour être nettoyé à l'aide d'un appareil soufflant. Des rognures de coupe peuvent s'infiltrer à l'intérieur de l'appareil et causer un incendie ou un choc électrique.

Important Notes on Handling and Use

This machine is a precision device. To ensure the full performance of this machine, be sure to observe the following important points. Failure to observe these points may not only result in loss of performance but may also cause malfunction or breakdown.

This machine is a precision device.

- Handle this machine carefully and never subject it to impacts or excessive force.
- Carefully clean away milling waste.
- Use this machine within the range of its specifications.
- Never attempt to move the spindle unit or rotary axis by hand with undue force.
- Never needlessly touch anywhere inside the machine except for locations specified in this manual.

Install this machine in a suitable location.

- Install this machine in a location that meets the specified conditions for temperature, humidity, and the like.
- Install this machine in a quiet, stable location offering good operating conditions.
- Never install this machine outside.
- Never install this machine in an environment where silicone substances (oil, grease, spray, etc.) are present. Doing so may cause poor switch contact.

Leave the machine and the compressor on at all times.

- Turning the machine off leads to moisture collecting inside of the machine, which may lead to malfunction.
- If the compressor is turned off, the supply of air to the machine's spindle unit will be stopped, which may lead to malfunction.

This machine becomes hot.

- Never cover the ventilation holes with cloth, tape, or anything else.
- Install this machine in a well-ventilated location.

This machine is a dedicated cutting machine for glass ceramics and composite resins.

- Never cut any material other than glass ceramics and composite resins.

1. Getting Started

About This Machine 22
Features of This Machine 22
Documentation Included with the Machine 22
Checking the Part Names and Included Items 23
Part Names and Functions 23
Checking the Included Items 27
Detection Pin for Correction 28
Items to Prepare Yourself 29
Items to Prepare Yourself 29
Water (Soft or Purified Water) 29
Source of Compressed Air (Compressor) 29
Air Hose 30
Fluid Receptacle 30
Additive (ZAW-1000D) 31
Chelating Reagent (ZCH-250D) 31

About This Machine

Features of This Machine

This machine is a dental cutting and milling machine that uses glass ceramics and composite resins to make dental prostheses, including crowns, bridges, inlays, onlays, and veneers.
Installing and setting up the exclusive software on your computer and connecting your computer to this machine enables you to create high-quality dental prostheses.
For the latest information regarding this machine (including manuals), see the DGSHAPE Corporation website (http://www.dgshape.com).

Documentation Included with the Machine

The following documentation is included with the machine.

- **DWX-42W Setup Guide (this document)**
  This manual describes how to install the machine and provides information on such matters as how to install the included software. Be sure to read this first.
  * You can find the PDF of the manual on the included DGSHAPE Software Package CD. The contents of the printed document and the PDF are the same.

- **DWX-42W User's Manual (electronic-format manual)**
  This manual explains how to operate the software and how to perform milling using this machine. The manual is in electronic format, and no printed document is included. You can find the manual on the included DGSHAPE Software Package CD.
  ☞ P. 61 "Step 1 : Filling the Coolant Tank"

- **Daily Maintenance Card ("Before/After Daily Operations")**
  This document provides an overview of the operations that must be performed before and after daily operations. Be sure to perform the operations on this card before starting and after finishing machine operations each day.

Checking the Part Names and Included Items

Part Names and Functions

Front

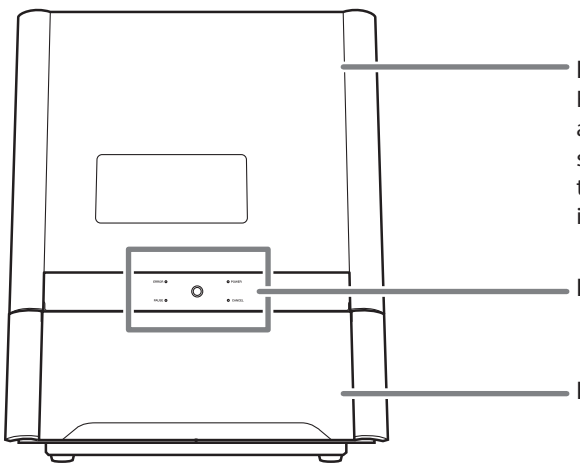

Front cover
For safety, the cover is locked and cannot be opened during spindle rotation (including the inertia after the spindle is instructed to stop).

Built-in panel

Bottom cover

Back

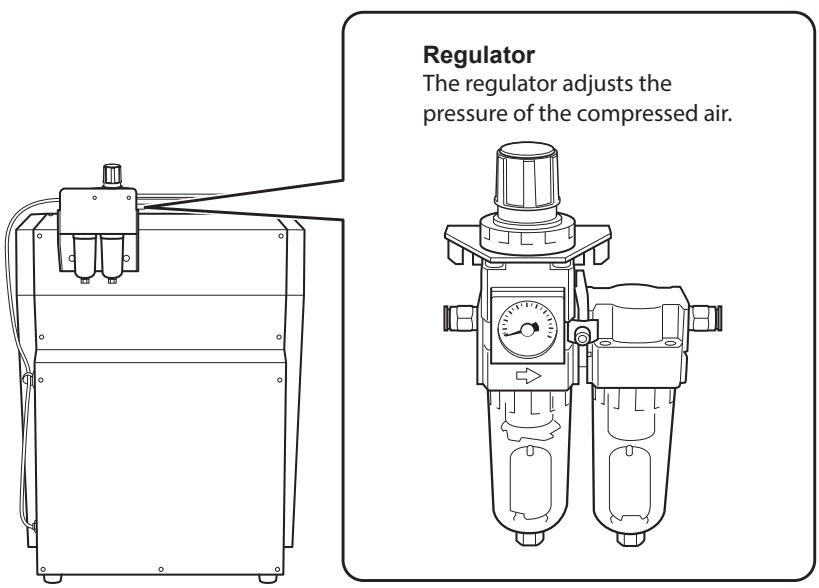

Regulator
The regulator adjusts the pressure of the compressed air.

MEMO

The regulator can also be installed on the side of the machine.

☞ P. 37 “Step 3 : Attaching the Regulator”

Inside the Front Cover

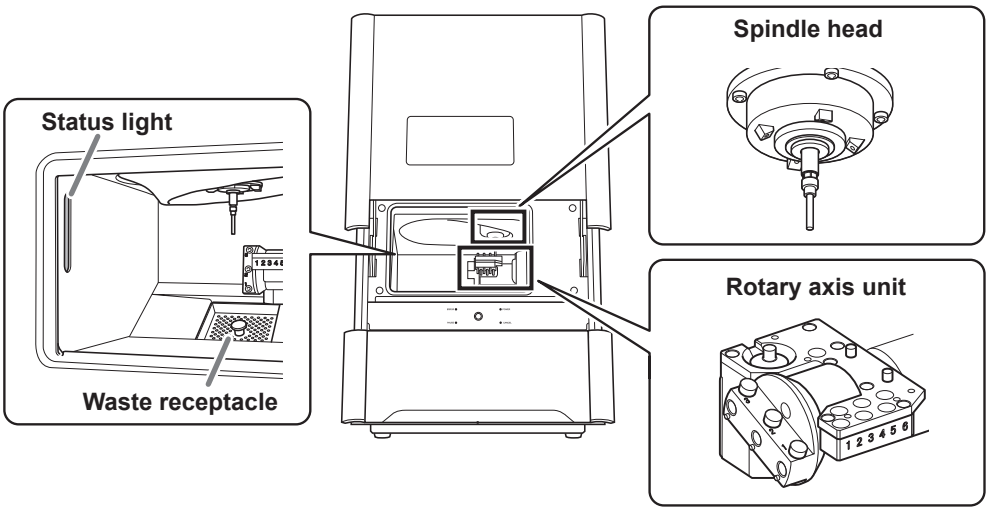

Rotary axis unit

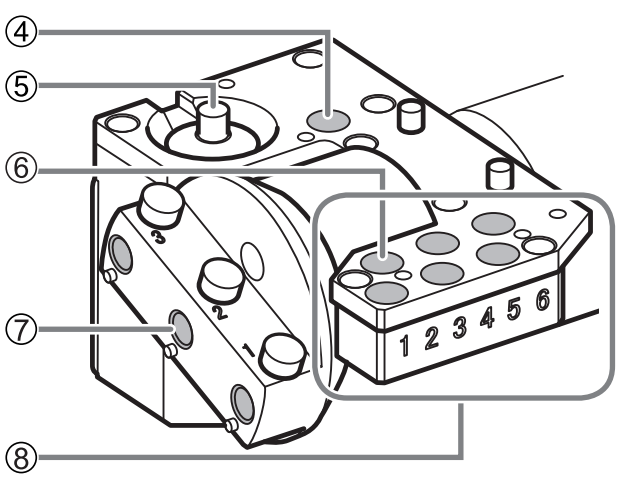

④	**Dummy pin stocker**	This is a stocker dedicated for the dummy pin. Do not set a milling bur in this stocker. Also, do not remove the dummy pin that is returned to this stocker.
⑤	**Milling bur sensor**	This sensor is used to adjust the milling bur height. If the surface is dirty, the sensor's accuracy will decrease, so keep the surface clean.
⑥	**Stocker**	The milling burs are set here.
⑦	**Mounting part**	The workpiece is attached here. You can attach up to three workpieces.
⑧	**ATC magazine**	Up to six milling burs can be set in this ATC-compliant magazine. ATC stands for Auto Tool Changer. This is a function for automatically replacing the milling bur (tool) to match the milling data.

Spindle head			
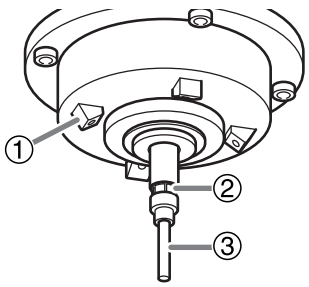	①	**Coolant nozzle**	The coolant is sprayed from this nozzle. Clean it once a week. ☞ "User's Manual"
	②	**Collet**	This tool is used to secure the milling bur. It needs to be maintained after operations are finished each day. ☞ "User's Manual"
	③	**Dummy pin**	This is a milling bur dummy. It is attached to the spindle upon shipment. A malfunction may occur if the collet does not grasp anything, so have it grasp the dummy pin when it is not grasping a milling bur.

* In the manuals for this machine (including this document), the mechanisms around the spindle unit are called the "spindle head." Also, the rotary-axis area inside the spindle unit is called the "spindle."

Inside the Bottom Cover

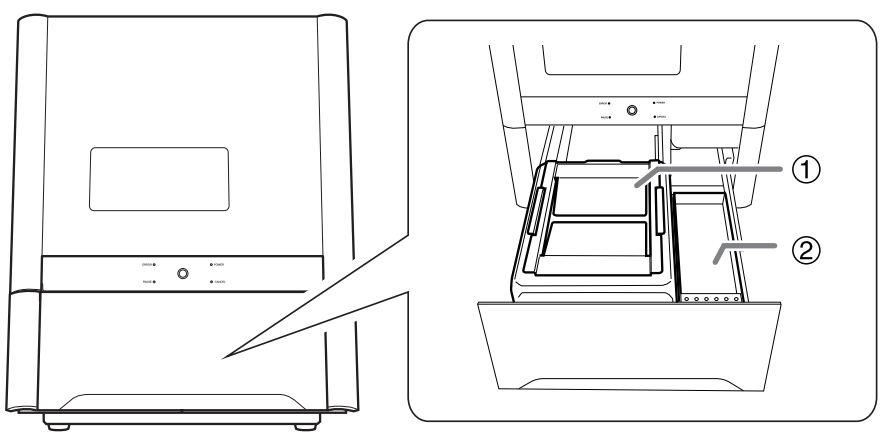

①	**Coolant tank**	This is the tank that holds the coolant. The coolant must be replaced and the filters must be cleaned periodically.
②	**Storage**	Milling burs and other items can be stored here. It has two levels. The upper level is exactly large enough to fit the included maintenance kit case.

Side

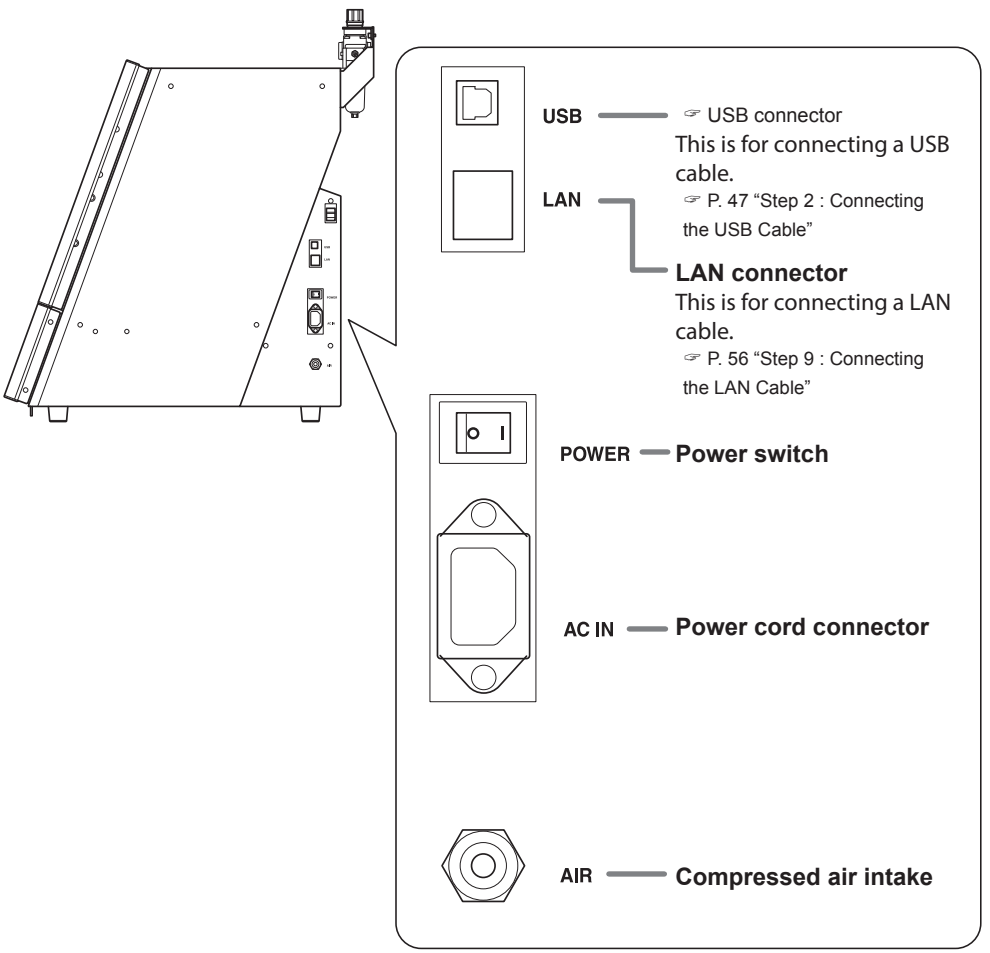
USB
☞ USB connector
This is for connecting a USB cable.
☞ P. 47 “Step 2 : Connecting the USB Cable”
LAN
LAN connector
This is for connecting a LAN cable.
☞ P. 56 “Step 9 : Connecting the LAN Cable”
POWER
Power switch
AC IN
Power cord connector
AIR
Compressed air intake

Checking the Included Items

The following items are included with the machine. Make sure they are all present and accounted for.

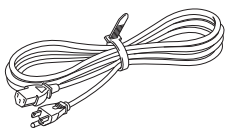

Power cord

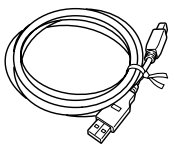

USB cable (1)



Drain hoses (2)

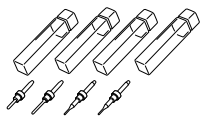

Dedicated milling burs (4)

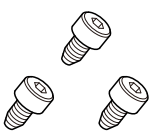

Spare tool retaining screws (3)

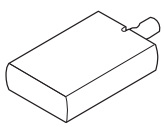

Rotary axis correction jig (1)

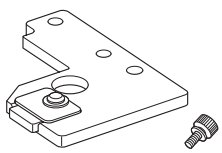

ATC magazine correction jig (1)/
A screw (1)

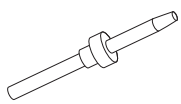

Detection pin for correction (1)

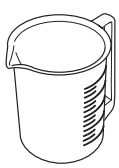

Measuring cup (1)

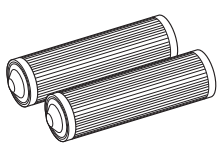

Coolant filters (2)

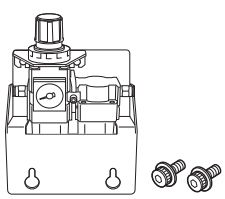

Regulator (with stay)/
B screws (2)

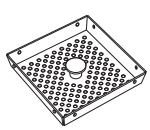

Waste receptacle

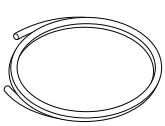

Air hose (1)

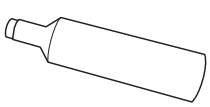

Milling bur removal jig (1)

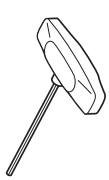

Hexagonal
screwdriver (1)

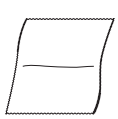

Cloth for
care and
maintenance

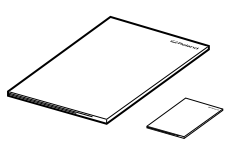

Setup Guide (this document; 1)/
Daily Maintenance Card (1)

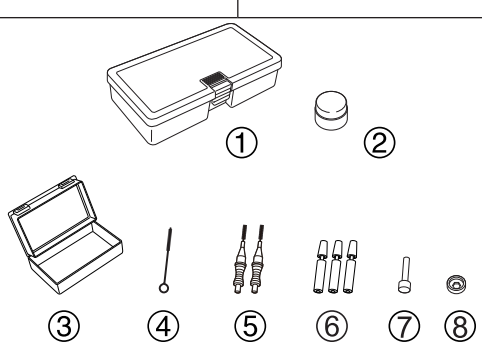

Maintenance kit

① Case (1)
② Grease (1)
③ Small case (1)
④ Collet brush (1)
⑤ Nozzle cleaners (2)
⑥ Taper cleaner (3)
⑦ Collet tap (1)
⑧ Collet replacement jig (1)

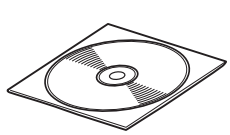

DGSHAPE Software Package
CD (1)

Detection Pin for Correction

- **The detection pin for correction is a maintenance tool used to correct the position of the rotary axis.**
- **Handle the "detection pin for correction" and the "dummy pin" separately to avoid confusing them.**

  The "dummy pin" is used as a "dummy" milling bur. A malfunction may occur if the collet does not grasp anything, so have it grasp the dummy pin when it is not grasping a milling bur. The dummy pin is attached to the spindle upon shipment.

  The dummy pin and the detection pin for correction have the same shape, but do not confuse them. If the detection pin for correction is used as the dummy pin even once, the detection pin for correction can no longer be used to provide proper correction. If for some reason the detection pin for correction is used as the dummy pin, a new detection pin for correction will be necessary. Contact your authorized DGSHAPE Corporation dealer or access our website (http://www.dgshape.com/).

Items to Prepare Yourself

Items to Prepare Yourself

- Water (soft or purified water)
- Source of compressed air (compressor)
- Air hose
- Fluid receptacle
- Additive (ZAW-1000D)
- Chelating reagent (ZCH-250D)

Explanations of each item are given below.

Water (Soft or Purified Water)

This is required in order to make the coolant. Use soft or purified water. Using hard water may have a negative effect on the service life of the milling bur and on the quality of the product.

Source of Compressed Air (Compressor)

This machine requires compressed air. You will need to prepare a compressor separately.

⚠WARNING **The pressure of the compressed air must be 1.0 MPa or less.**
Anything higher may result in a serious accident such as a rupture.

⚠WARNING **Ensure that the supplied compressed air is not contaminated by water, oil, chemicals, or foreign objects.**
The components may deteriorate or rupture, or the contaminants may be scattered, posing a hazard.

⚠WARNING **Do not supply the compressed air until the air hose is connected securely.**
Failure to do so may cause an accident.

The compressor must meet the following conditions.

- Control pressure: 0.3 MPa or more
- Air capacity: 39 L/min or more
- Oil-free type
- Dryer-equipped

Air Hose

You will need to separately prepare an air hose to connect the compressor to the regulator.

*** Use the included air hose to connect the regulator to the machine.**

The air hose must meet the following conditions.

- Hose outer diameter: 6 mm (polyurethane resin tube)

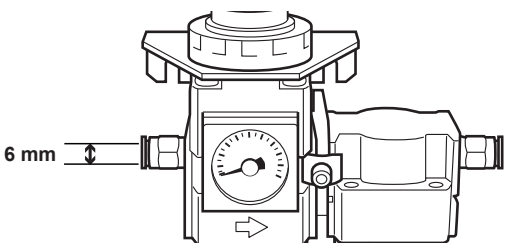

Note

Be sure to use the included regulator when supplying compressed air.

Fluid Receptacle

Because fluid accumulated in the regulator will drain out little by little, prepare a fluid receptacle such as a tray.

☞ P. 37 “Step 3 : Attaching the Regulator”

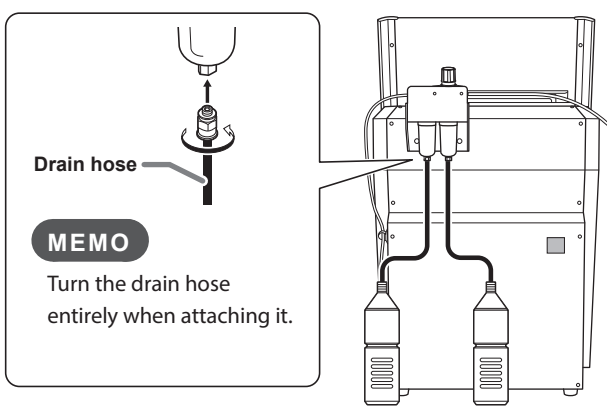

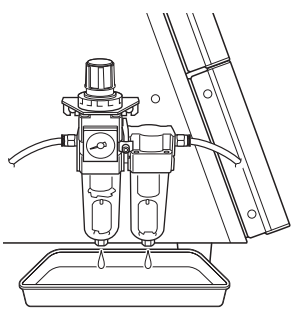

Additive (ZAW-1000D)

To make the coolant, you will need to prepare the designated additive separately. To purchase additives, contact your authorized DGSHAPE Corporation dealer or access our website (http://www.dgshape.com/).

Note

- Store additives in a cool, dark place.
- Due to the characteristics of the internal components, the color may change and deposits of separated components may form, but these do not indicate any problems with the use of the additives.
- If component deposits form, lightly shake the container to mix the components before use.

  *** The expiration date is one year from the date of manufacture (written on the unit packaging box).**

Chelating Reagent (ZCH-250D)

The ZCH-250D (hereinafter referred to as the "chelating reagent") works to make calcium and other substances contained in water inactive. Including it in this product makes it easier to clean off milling powder that adheres to the machine and the cutting tool after milling. To purchase chelating reagent, contact your authorized DGSHAPE Corporation dealer or access our website (http://www.dgshape.com/).

*** The expiration date is one year from the date of manufacture (written on the unit packaging box).**

In the event of additive or chelating reagent ingestion or physical distress

- In the event of contact with the eyes, immediately flush with water for at least 15 minutes. If eye irritation continues, seek treatment by a physician.
- In the event of contact with skin, immediately wash with soap. If irritation or inflammation occurs, seek treatment by a physician.
- In the event of ingestion, do not induce vomiting, and immediately seek treatment by a physician. Forcibly inducing vomiting may lead to danger of choking.
- If odor leads to physical distress, move to a well-ventilated location and rest quietly. If dizziness or nausea persists, seek treatment by a physician.

  *** Refer to the appropriate safety data sheet (SDS) for the chemical substances used in the additive and chelating reagent and the safety related to those substances.**

2. Installation and Setup

1. Installation 34
- Step 1 : Deciding on an Installation Site 34
- Step 2 : Removing the Retainers 36
- Step 3 : Attaching the Regulator 37
- Step 4 : Attaching the Garbage Receptacle 42

2. Connecting to the Computer 43
- Procedure Overview 43
- Step 1 : Installing the Software 44
- Step 2 : Connecting the USB Cable 47
- Step 3 : Switching the Power On 48
- Step 4 : Selecting the Machine to Connect To 50
- Step 5 : Determining the LAN Address 51
- Step 6 : Setting the Computer's Network 52
- Step 7 : Setting the Machine's Network 54
- Step 8 : Disconnecting the USB Cable 56
- Step 9 : Connecting the LAN Cable 56
- Step 10 : Selecting the Machine to Connect To 58

3. Performing the Initial Work 61
- Initial Work 61
- Step 1 : Filling the Coolant Tank 61
- Step 2 : Automatic Correction 68
- Step 3 : Spindle Run-In (Long) 73

1. Installation

Step 1 : Deciding on an Installation Site

Placement and Installation

The weight of the machine alone is 61 kg (135 lb.). Unload and place the machine with care.

⚠WARNING **Unloading and placement are operations that must be performed by 2 persons or more.**
Tasks that require undue effort when performed by a small number of people may result in physical injury. Also, if dropped, such items may cause injury.

⚠CAUTION **When lifting the machine, hold the locations shown in the figure.**

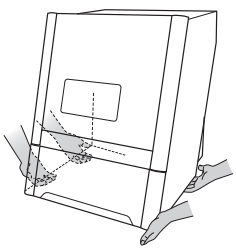

Installation Environment

⚠WARNING **Install in a level and stable location.**
Failure to do so may result in falling of the machine, leading to injury.

⚠WARNING **Never install the machine in a location exposed to open flame.**
Milling waste may ignite. Powdered material is extremely flammable, and even metal material may catch fire.

⚠WARNING **Never install the machine close to any flammable object or in a gas-filled location.**
Combustion or explosion may occur.

⚠WARNING **Never install this machine outside or in any location where exposure to water or high humidity may occur.**
Current leakage may cause electrical shock or fire.

⚠WARNING **Position so that the power plug is within immediate reach at all times.**
This is to enable quick disconnection of the power plug in the event of an emergency. Install the machine next to an electrical outlet. Also, provide enough empty space to allow immediate access to the electrical outlet.

- Never install the machine in a location subject to wide fluctuations in temperature or humidity.
- Never install the machine in a location subject to shaking or vibration.
- Never install the machine in a dusty or dirty location.
- Never install the machine in a location exposed to direct sunlight or near air-conditioning or heating equipment.
- Never install the machine in a location exposed to considerable electrical or magnetic noise or other forms of electromagnetic energy.
- Never install this machine in an environment where silicone substances (oil, grease, spray, etc.) are present. Doing so may cause poor switch contact.

Installation space

Ensure that at least the following amount of space is available.

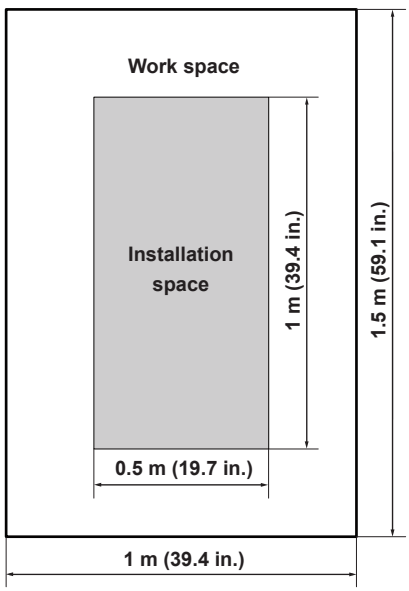

Ensure that enough space is available to allow the front cover to be opened.
Ensure that space is available in front of and behind the machine to enable the opening of the bottom cover.

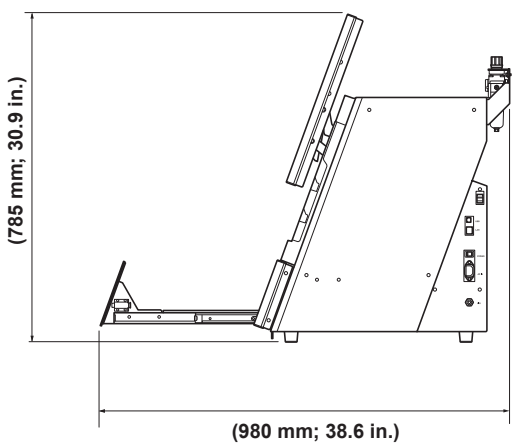

Installation Location Height

- **The installation location should be above the work floor by 0.6 m (23.6 in.) or more.**
  This machine is a desktop-type unit. Install in a location where the power button and other controls are easily accessible.

Step 2 : Removing the Retainers

Retainers are attached to protect the machine from vibration during shipment. When installation is complete, remove and save these retainers.

- Be sure to remove the retainers. Any that remain may cause faulty operation or a breakdown when the power is switched on.
- The retainers will be required when moving the machine to a different location. Store them carefully so that they do not get misplaced.
- When removing the retainers, make sure the power cord is not connected.

Procedure

1 **Open the front cover.**

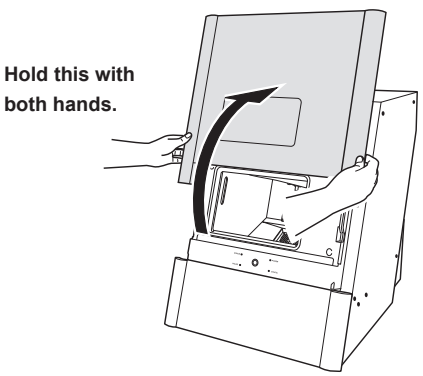

2 **Remove the retainers.**

① **Pull the bottom of the retainer (large) toward you.**

② **Slide the retainer with it facing up to remove it.**

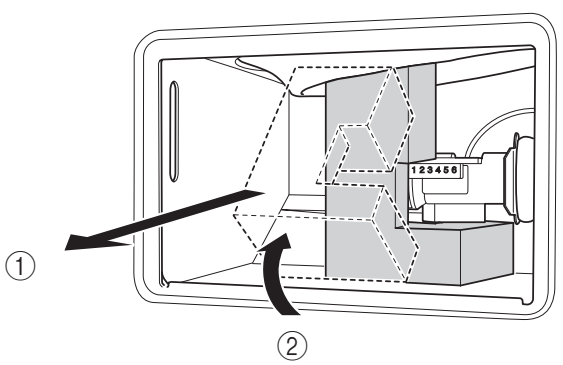

③ **Remove the retainer (small).**

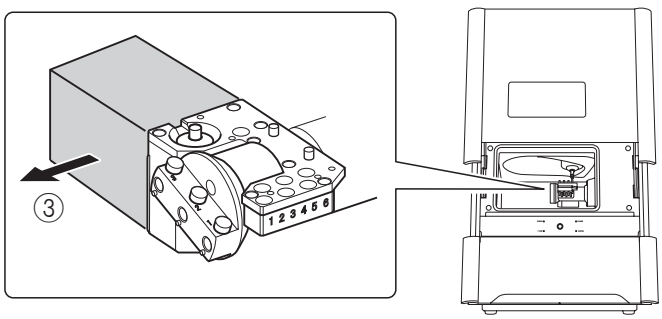

3 **Close the front cover.**

Step 3 : Attaching the Regulator

The regulator for this machine is the auto-drain type. Attaching the regulator incorrectly can cause leakage. Be sure to attach the regulator according to the procedure.

⚠WARNING **Before supplying compressed air, make sure that the bowl is securely attached.**
If the bowl is not properly attached, it may come flying off.

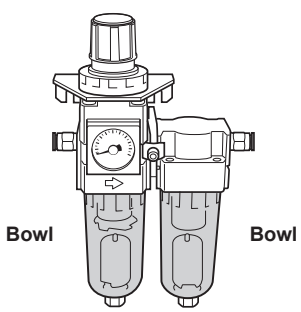

Required Included Items

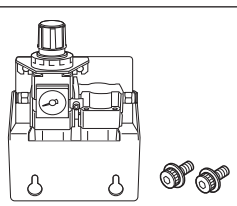 Regulator (with stay)/ B screws (2)	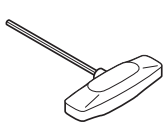 Hexagonal screwdriver (1)

Procedure

1 Attach the regulator to the machine.

When attaching the regulator to the back of the machine

① **Temporarily tighten the B screws in two locations on the back of the machine.**
Use the screw holes at the top of the back of the machine.

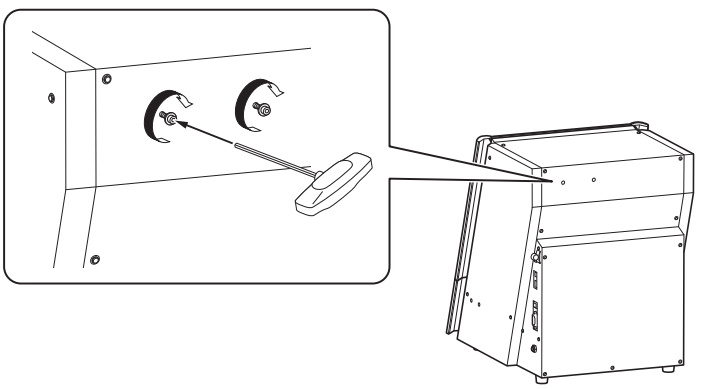

② **Attach the regulator's stay to the B screws from step ①.**

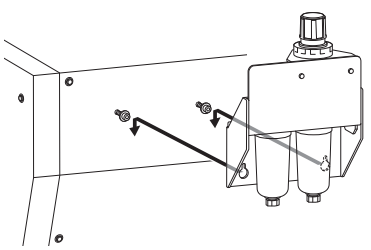

③ **Secure the regulator's stay.**
Fully tighten the B screws attached in step ①.

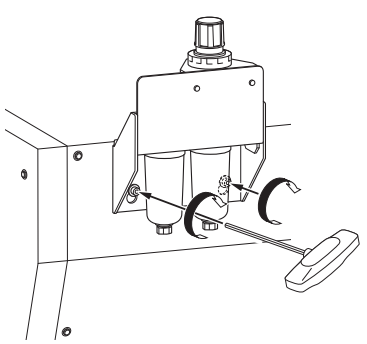

When attaching the regulator to the side of the machine

① **Remove the regulator from the stay.**
Loosen the screws.

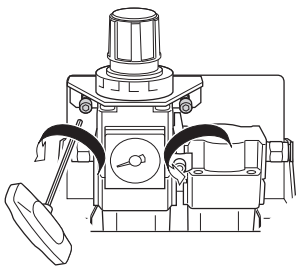

② **Temporarily tighten the B screws in two locations on the side of the machine.**
Use the screw holes at the bottom of the side of the machine. You can attach the regulator on either the left side or right side of the machine.

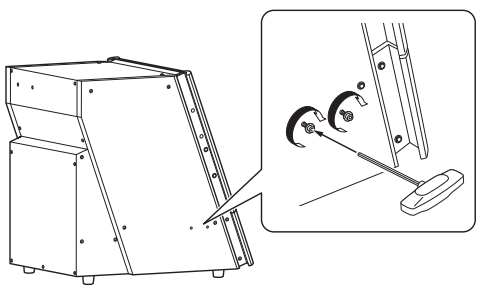

MEMO

There are screw holes for attaching the regulator at the same height on the left side and right side of the machine.

③ **Attach the regulator to the B screws from step ②.**

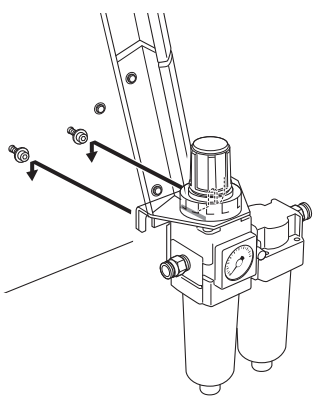

④ **Secure the regulator.**
Fully tighten the B screws attached in step ②.

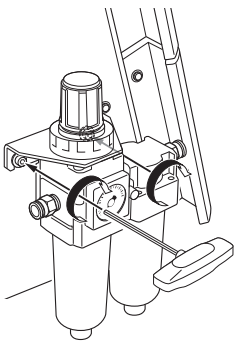

2 **Use the air hoses to connect the regulator to the machine and the regulator to the source of compressed air.**

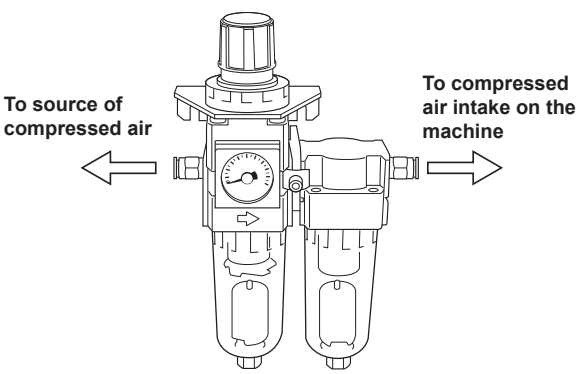

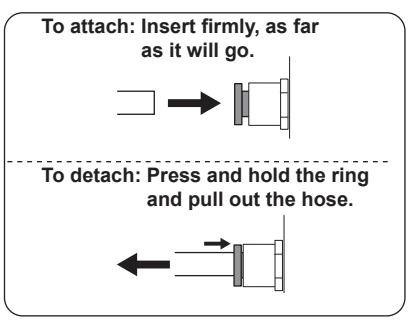

⚠WARNING **Securely insert the air hose as far as it will go. Lightly tug the hose to make sure it does not come loose.**
If it is not inserted securely, it may come loose.

3 **Supply compressed air and verify that air does not leak from the connections or any other location.**

4 Adjust the air pressure.

⚠WARNING **Turn the air pressure adjustment knob slowly and carefully.**
Otherwise, the machine may move suddenly, posing a risk of injury.

① **Pull up on the upper knob (the air pressure adjustment knob).**

② **Slowly turn the upper knob.**
Adjust until the meter reads between 0.18 and 0.22 MPa.

③ **Push down on the upper knob.**

Important: Be sure to set the regulator to 0.22 MPa or lower. Anything higher may result in a malfunction.

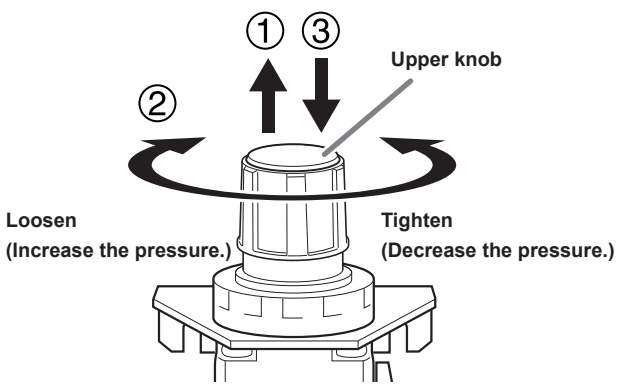

5 Prepare a fluid receptacle.

Use the drain hoses (included) or a tray.

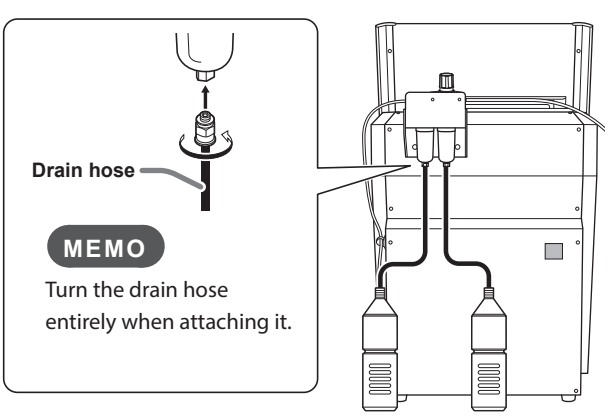

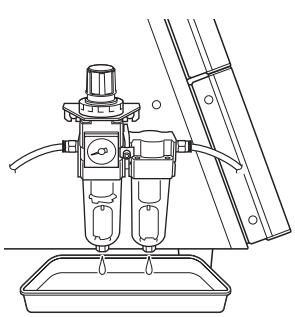

Step 4 : Attaching the Garbage Receptacle

Procedure

1. **Open the front cover.**
2. **Attach the garbage receptacle.**

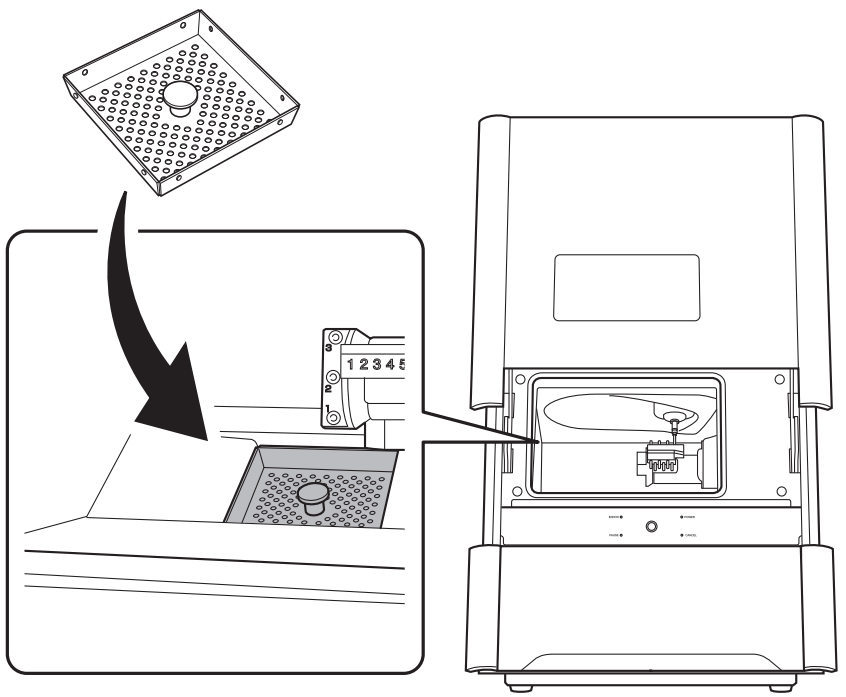

2. Connecting to the Computer

Procedure Overview

You can connect the computer and this machine through its USB interface or LAN interface. The procedure varies depending on the connection method. We recommend that you use the overview shown below to understand the overall procedure before starting the connection operations.

USB	LAN	Procedure
○	○	**Step 1: Installing the Software (P. 44)**
○	○	**Step 2: Connecting the USB Cable (P. 47)**
○	○	**Step 3: Switching the Power On (P. 48)**
○	○	**Step 4: Selecting the Machine to Connect To (P. 50)**
	○	**Step 5: Determining the LAN Address (P. 51)**
	○	**Step 6: Setting the Computer's Network (P. 52)**
	○	**Step 7: Setting the Machine's Network (P. 54)**
	○	**Step 8: Disconnecting the USB Cable (P. 56)**
	○	**Step 9: Connecting the LAN Cable (P. 56)**
	○	**Step 10: Selecting the Machine to Connect To (P. 58)**

* * When using a LAN connection, we recommend that you use a LAN connection after connecting over a USB according to this procedure. By establishing a USB connection and a LAN connection, you can reduce the risk of operations being stopped due to unexpected network problems.

* * You can connect just over a LAN without using a USB connection. For details on the connection method, see the "User's Manual."

Step 1 : Installing the Software

System Requirements

Operating system (OS)	Windows 7/8.1/10 (32-bit and 64-bit versions)
CPU	Minimum required CPU for the operating system
Memory	Minimum amount of RAM required for the operating system
Optical drive	CD-ROM drive
Video card and monitor	A monitor with at least 256 colors and a resolution of 1024 × 768 or more is recommended.

- This software is a 32-bit application and therefore runs in WOW64 (Windows-On-Windows 64) when running on 64-bit versions of Windows operating systems.
- This software has not been tested when running in the Windows XP mode in Windows 7.

For the latest information, see the DGSHAPE Corporation website (http://www.dgshape.com/).

Installable Software

VPanel for DWX	This is the machine control software designed for the DWX series made by DGSHAPE Corporation.* * Some models are not supported. For details on the supported models, contact your authorized Roland DG Corporation dealer.
Dental Driver (Windows driver)	This is a Windows-based driver required for sending data from a computer to the machine.
Setup Guide (electronic-format manual)	This is the PDF of this document. The contents are the same.
User's Manual (electronic-format manual)	This manual explains how to operate the software, how to perform milling using this machine, and how to perform maintenance.

Installation Procedure

You can install the driver, software, and electronic-format manual all at once. You can also install the driver and each piece of software separately.

☞ “User’s Manual” (electronic-format manual) “Installing the Driver Separately”

Important

Be sure to connect the machine to the computer as instructed in the procedure. Failure to follow the correct procedure may make installation impossible.

Procedure

1. **Before installation, confirm that the machine and the computer are not connected with the USB cable.**

2. **Log on to Windows as an “Administrator.”**

3. **Insert the DGSHAPE Software Package CD into the CD-ROM drive of the computer.**

   When the automatic playback window appears, click [Run menu.exe]. If a [User Account Control] window appears, click [Allow] or [Yes], and then continue with the installation. The setup menu screen appears automatically.

4. **Click [Install].**

   Install the DWX-42W driver and the various software all at once. Follow the on-screen instructions to proceed with the installation.

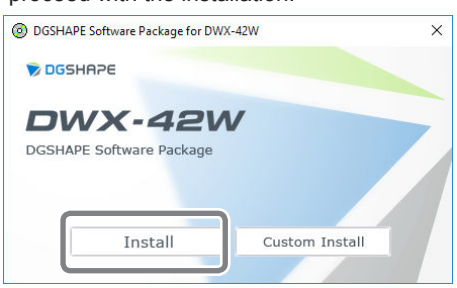

5. **Click [OK].**

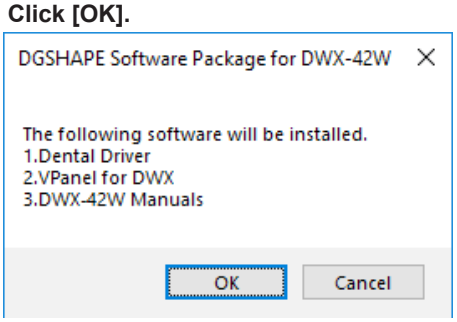

6 **Select [Install], [DGSHAPE DWX-42W] for the model name, and [USB] for the port, and then click [Start].**

The driver installation begins. Proceed with the installation by following the displayed information.

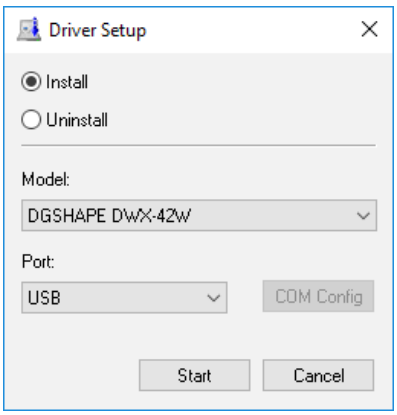

7 **If the following window appears, click [Install].**

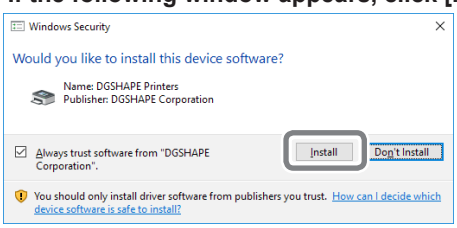

Installation information for each piece of software will be displayed automatically. Follow the instructions displayed for each installer to continue with the installation.

8 **Click [OK].**

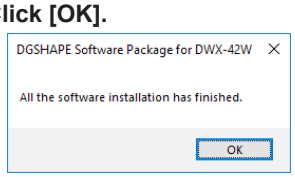

9 **Click ✕ on the setup menu screen.**

10 **Remove the DGSHAPE Software Package CD from the computer.**

How to View the Electronic-Format Manual

Windows 10

From the [Start] menu, click [DGSHAPE DWX-42W], and then click [Setup Guide] or [User's Manual].

Windows 8.1

On the [Start] screen, click . On the [Apps] screen, click the [Setup Guide] or [User's Manual] icon under [DGSHAPE DWX-42W].

Windows 7

From the [Start] menu, click [All Programs], [DGSHAPE DWX-42W], and then click [Setup Guide] or [User's Manual].

Step 2 : Connecting the USB Cable

- Use the included USB cable.
- Do not use a USB hub. Connection may not be possible.
- When using a LAN connection, we recommend that you use a LAN connection after connecting over a USB.
  By establishing a USB connection and a LAN connection, you can reduce the risk of operations being stopped due to unexpected network problems.
- Fix the USB cable in place with the cable clamp.

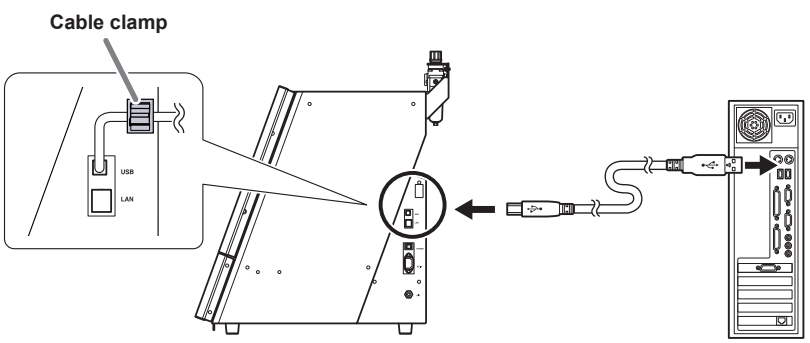

Important: When connecting multiple machines

When using USB cables to connect two or more machines to one computer, be sure to refer to the User's Manual. To connect the second and subsequent machines, you have to change the machine's ID. Connecting before changing the ID may render the machine unusable.

Step 3 : Switching the Power On

Procedure

1 Connect the power cord.

⚠WARNING **Connect to an electrical outlet that complies with this machine's ratings (for voltage, frequency, and current).**
Incorrect voltage or insufficient current may cause fire or electrical shock.

⚠WARNING **Handle the power cord, plug, and electrical outlet correctly and with care. Never use any article that is damaged.**
Using a damaged article may result in fire or electrical shock.

⚠WARNING **When using an extension cord or power strip, use one that adequately satisfies the machine's ratings (for voltage, frequency, and current).**
Use of multiple electrical loads on a single electrical outlet or use of a lengthy extension cord may cause fire.

⚠WARNING **Connect to ground.**
This can prevent fire or electrical shock due to current leakage in the event of a malfunction.

⚠WARNING **Connect this machine to a power outlet. Never connect this machine directly to a power distribution panel or other such fixed wiring equipment.**
Doing so increases the risk of fire or electrical shock.

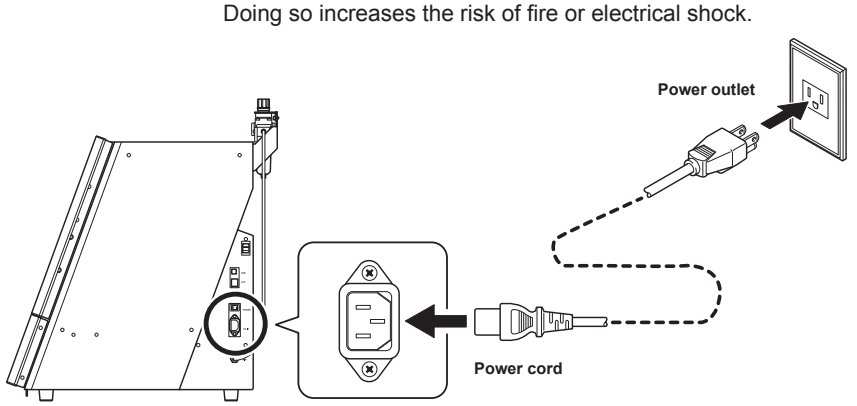

2 **Turn on the power.**

The machine starts the initial operations. The Windows driver will be installed automatically on the computer connected with the USB cable.

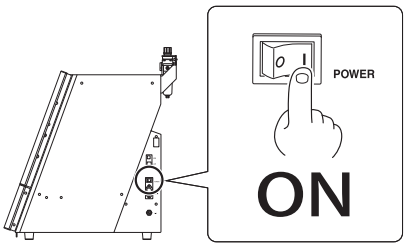

Important

- Do not bind the power code with the cable clamp.
- Wire the power cord so that it does not come into contact with the USB cable. The power cord coming into contact with any other cables will result in communication malfunctions due to electrical noise.

Step 4 : Selecting the Machine to Connect To

1 Start VPanel.

Windows 10

From the [Start] menu, click [VPanel for DWX], and then click [VPanel for DWX].

Windows 8.1

Click  on the [Start] screen. On the [Apps] screen, click the [VPanel for DWX] icon under [VPanel for DWX].

Windows 7

From the [Start] menu, click [All Programs], [VPanel for DWX], and then click [VPanel for DWX].

2 From the [Usable machine list], click the image of the machine that you want to operate.

The clicked machine is displayed under [Machine to operate] and is displayed dimly in the [Usable machine list]. If you click the same machine again in the [Usable machine list], the machine disappears from the [Machine to operate] field.

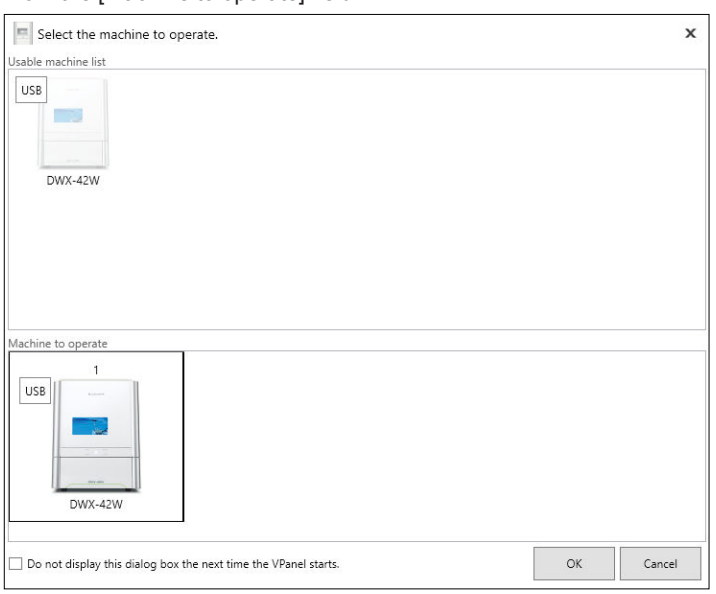

3 Click [OK].

* For a USB connection, this completes the connection to the computer.
* For a LAN connection, proceed to P. 51 “Step 5 : Determining the LAN Address”.

Step 5 : Determining the LAN Address

Important: Windows firewall function

During LAN communication, this machine uses TCP ports 9100, 9500, and 9501. If you are using the Windows firewall function, set it so that these ports are not blocked.

Important: Network settings

The settings listed here are only an example. The procedure and settings given in this manual do not match every environment. In an environment where the computer being used is connected to multiple network devices and the Internet, inappropriate settings will have a large effect on the entire network. For detailed information about the settings, consult your network administrator.

Determine the IP address, subnet mask, and default gateway to connect the computer and the machine via LAN.

Connecting the Computer and the Machine Directly

	Computer	Machine side	Remarks
IP address	192.168.1.XXX	192.168.1.YYY	Ensure that these are unique numbers compared to other network devices and that "XXX" and "YYY" represent unique numbers from 1 to 254.
Subnet mask	255.255.255.0	255.255.255.0	Set the computer and the machine to the same number.
Default gateway	192.168.1.AAA	192.168.1.BBB	"AAA" and "BBB" represent unique numbers from 1 to 254. This setting may not be necessary. For details, check with your network administrator.

Connecting to an Existing LAN Environment

For each setting value, check with your network administrator.

	Computer	Machine side
IP address	Check with your network administrator.	Check with your network administrator.
Subnet mask	Check with your network administrator.	Check with your network administrator.
Default gateway	Check with your network administrator.	Check with your network administrator.

Step 6 : Setting the Computer's Network

* This step is not necessary when connecting to an existing LAN environment. Proceed to P. 54 "Step 7 : Setting the Machine's Network".

Procedure

1 Log on to Windows as the computer's administrator or as a member of the "Administrators" group.

2 Display the [Internet Protocol Version 4 (TCP/IP) Properties] window on the computer.

Windows 10

① **On the [Start] menu, click [Settings].**
② **Click [Network & Internet] then [Network and Sharing Center].**
③ **Click [Change adapter settings] from the list on the left side of the window.**
④ **Right-click [Ethernet].**
⑤ **Click [Properties].**

Windows 8.1

① **On the [Start] menu, click [PC settings] then [Control Panel].**
② **Click [Network & Internet] then [Network and Sharing Center].**
③ **Click [Change adapter settings] from the list on the left side of the window.**
④ **Right-click [Ethernet].**
⑤ **Click [Properties].**

Windows 7

① **On the [Start] menu, click [Control Panel].**
② **Click [Network & Internet] then [Network and Sharing Center].**
③ **Click [Change adapter settings] from the list on the left side of the window.**
④ **Right-click [Local Area Connection].**
⑤ **Click [Properties].**

3 **Select [Internet Protocol Version 4 (TCP/IPv4)], and then click [Properties].**

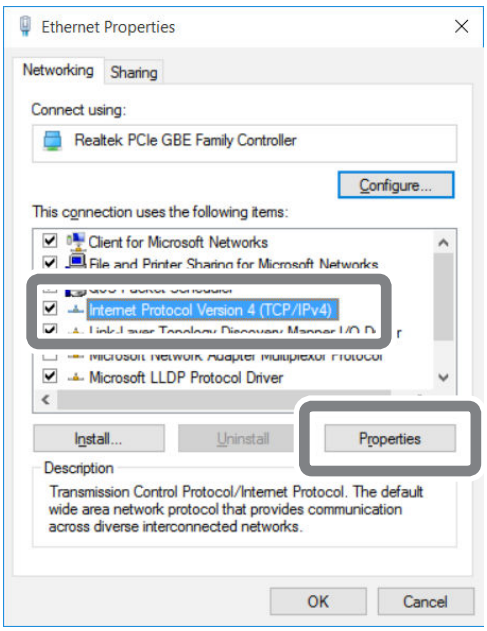

* With a Wi-Fi connection, the name of this window is [Wi-Fi Properties].

* On Windows 7, the name of this window is [Local Area Connection Properties] or [Wireless Network Connection Properties].

4 **Select [Use the following IP address], and then enter the number you determined in P. 51 “Step 5 : Determining the LAN Address”.**

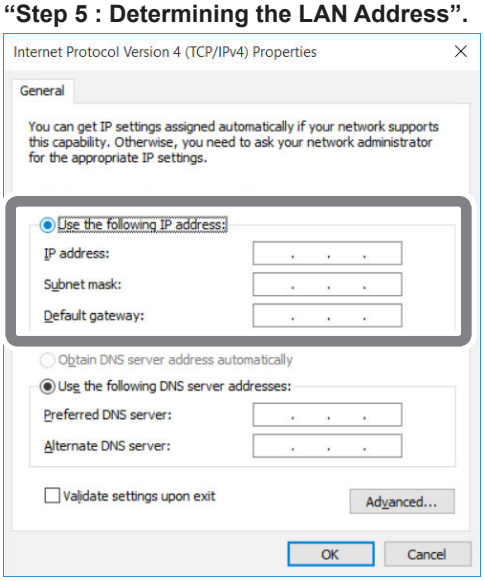

5 **Click [OK] or [Close] to close the windows that have been displayed in the procedure.**

Step 7 : Setting the Machine's Network

Procedure

1 VPanel will be displayed.

Click (the VPanel icon) in the task tray on the desktop.
VPanel will be displayed. If you cannot find in the task tray, start the program from the Windows [Start] screen (or the [Start] menu).

☞ P. 50 “Step 4 : Selecting the Machine to Connect To”

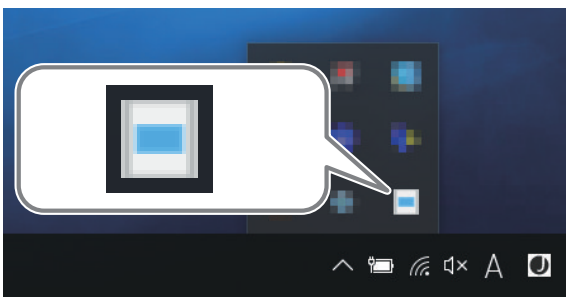

2 Click .

The [Settings] window is displayed.

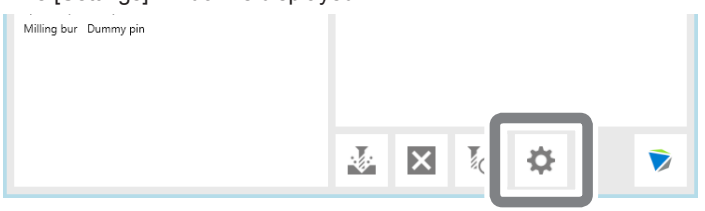

3 **Click the [Settings] tab, and then click [Add connection].**

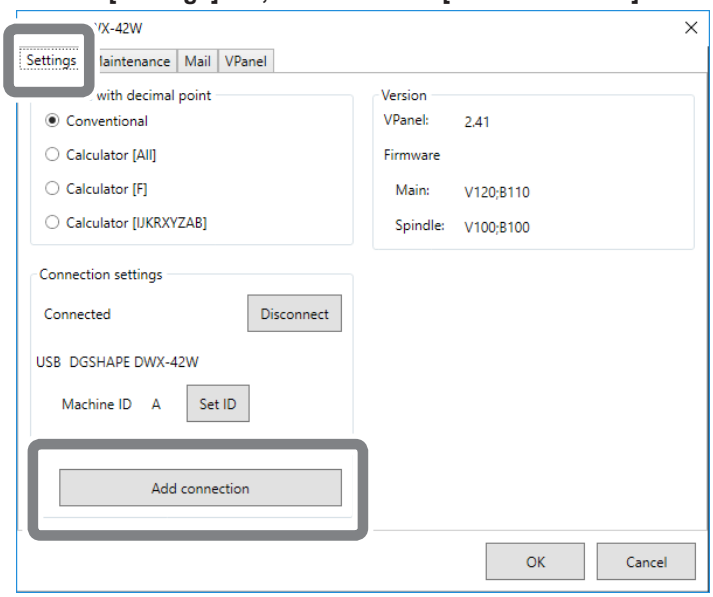

4 **Enter the items.**

- **Enter a unique name for [LAN-connected printer name]. The name you enter here will be displayed in VPanel and as the name of the computer's printer.**
- **Enter the values determined in "Step 5 : Determining the LAN Address" (P. 51) for the [IP address], [Subnet mask], and [Default gateway].**

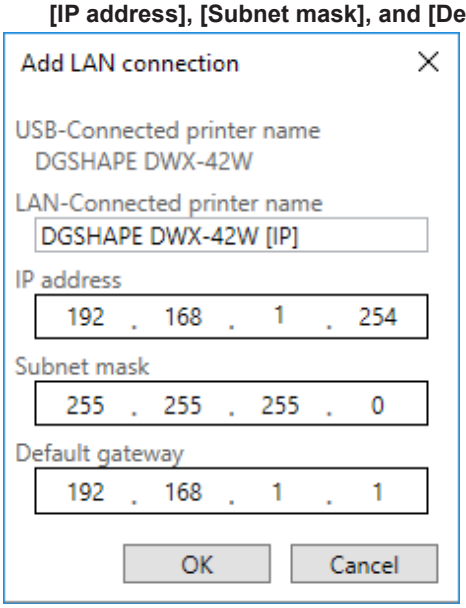

5 **Click [OK].**

The machine restarts. The settings are complete when the machine finishes restarting.

MEMO

- The name entered for [LAN-connected printer name] is added to [Devices and Printers] in Control Panel.
- The name entered for [LAN-connected printer name] is displayed on the [Settings] tab in the [Settings] window in VPanel.
- If you want to change the machine's network settings, click [Set IP] on the [Settings] tab in the [Settings] window in VPanel.

Step 8 : Disconnecting the USB Cable

- Remove the USB cable from the cable clamp.

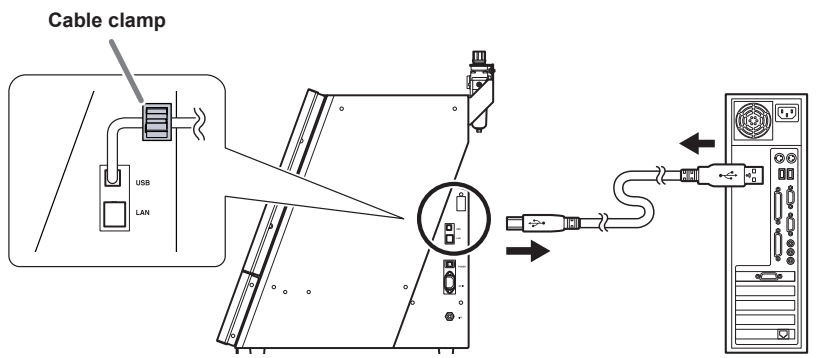

Step 9 : Connecting the LAN Cable

- Prepare a LAN cable (Category 5 or higher) separately.
- We recommend 100BASE-TX for the Ethernet.

Important

- Do not bind the LAN cable with the cable clamp.
- Wire the LAN cable so that it does not touch the USB cable or the power cord.
  The LAN cable coming into contact with other cables will result in communication errors due to electrical noise.

Connecting the Computer and the Machine Directly

Connecting through a LAN hub

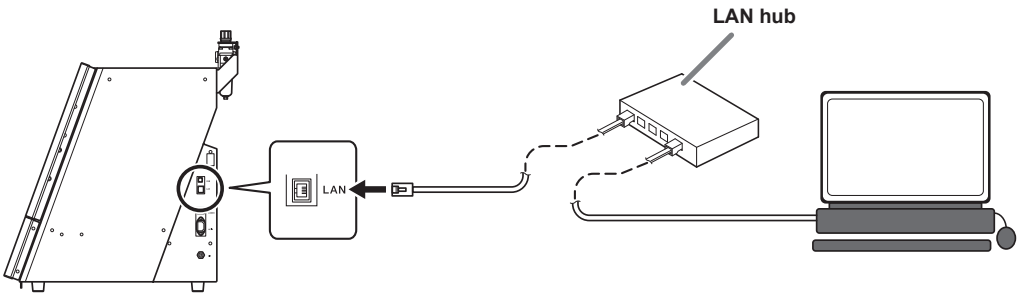

Important: Do not connect any device other than the machine and a computer to the LAN hub.

Do not connect any device other than the designated machine and a computer to the LAN hub being used here. Connecting any other device will prevent the settings from being configured correctly and may cause problems with the network settings of connected devices.

Connecting the machine and the computer directly

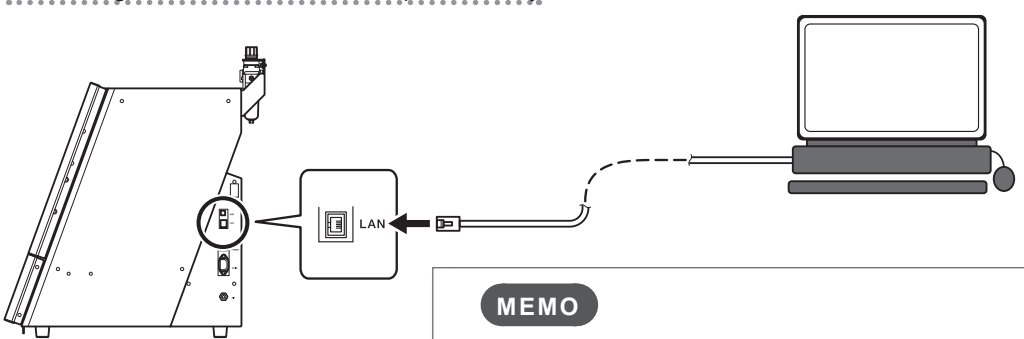

MEMO

A direct connection to the machine is possible when using a crossover cable. In addition, if the computer supports AUTO MDI/ MDI-X, a direct connection to the machine is possible when using a straight cable.

Connecting to an Existing LAN Environment

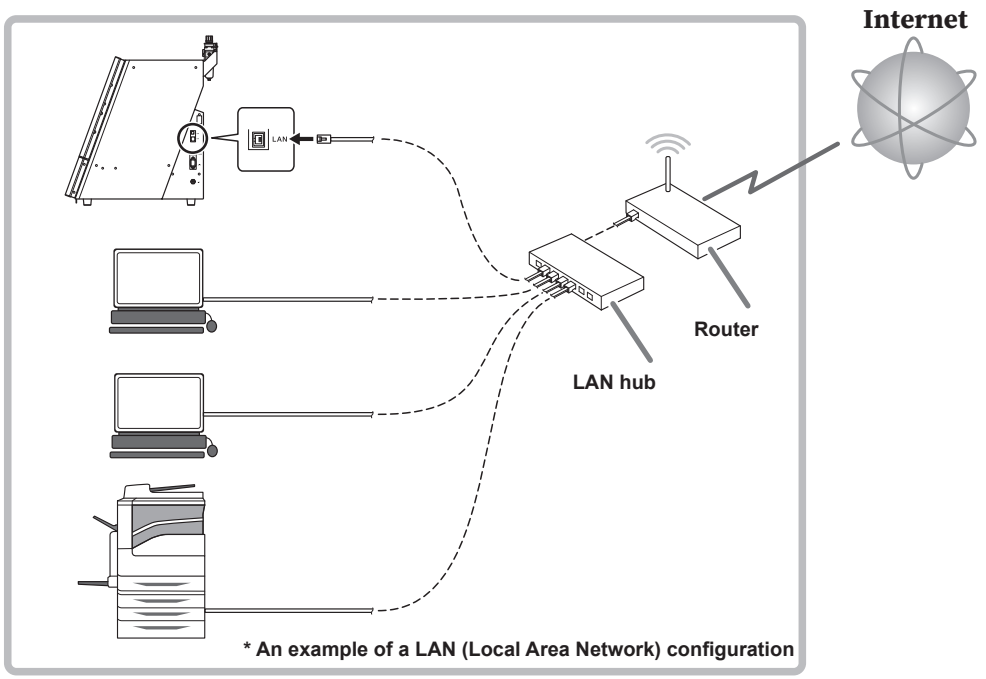

* An example of a LAN (Local Area Network) configuration

Step 10 : Selecting the Machine to Connect To

Procedure

1 Show VPanel.

Click (the VPanel icon) in the task tray on the desktop.
VPanel will be displayed. If you cannot find in the task tray, start the program from the Windows [Start] screen (or the [Start] menu).

☞ P. 50 “Step 4 : Selecting the Machine to Connect To”

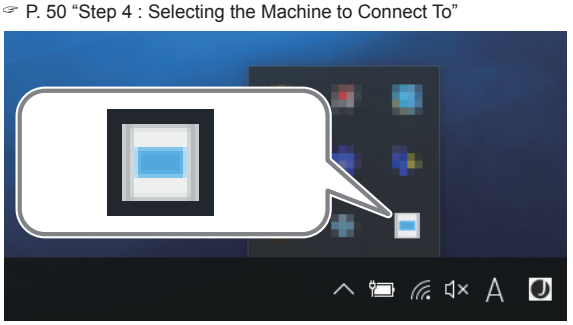

2 **Click** .

The [Settings] window is displayed.



3 **Click the [VPanel] tab, and then click [Select].**

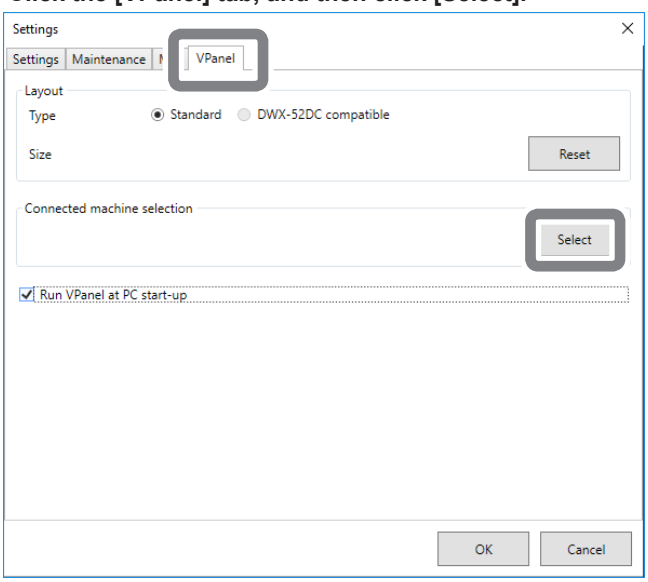

4 From the [Usable machine list], click the image of the machine whose [LAN-connected printer name] was set in step 4 of "Step 7 : Setting the Machine's Network" (P. 54).

The clicked machine is displayed under [Machine to operate] and is displayed dimly in the [Usable machine list]. If you click the same machine again in the [Usable machine list], the machine disappears from the [Machine to operate] field.

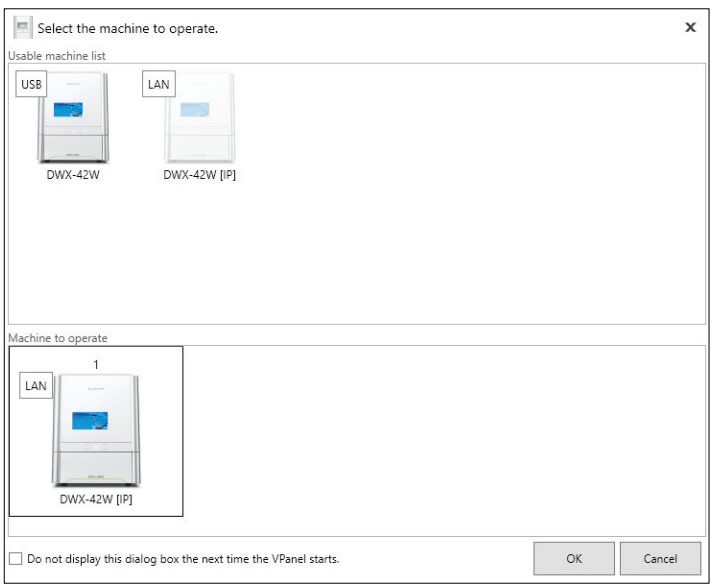

Important: When the machine is connected to multiple computers.

If the same machine is selected as the [Machine to operate] on multiple computers, communication may become unstable. Before selecting the machine that was connected this time, check that it is not displayed as the [Machine to operate] in the VPanel window on other computers.

5 Click [OK].

3. Performing the Initial Work

Initial Work

Situations When “Initial Work” Is Required

- After the initial installation
- When the installation site is changed

Flow of the “Initial Work”

- STEP 1: Filling the Coolant Tank (P.61)
- STEP 2: Automatic Correction (P.68)
- STEP 3: Spindle Run-In (Long) (P.73)

Step 1 : Filling the Coolant Tank

⚠CAUTION **Do not overfill or tilt the coolant tank.**
The fluid inlet on the coolant tank is open. Overfilling or tilting will cause fluid to spill out.

⚠CAUTION **When raising or lowering the coolant tank, hold the position indicated in the following figure.**
Failing to do so may result in your fingers being pinched, leading to injury.

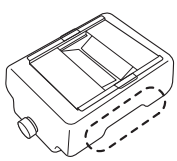

Items to Prepare Separately

- **Water (soft or purified water)** (P.29)
- **Additive (ZAW-1000D)** (P.31)
- **Chelating reagent (ZCH-250D)** (P.31)

Filling

1. Remove the coolant tank.

1 **Click**  **.**

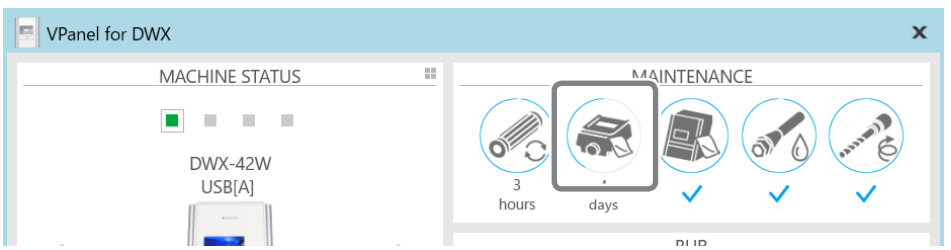

The following window is displayed.

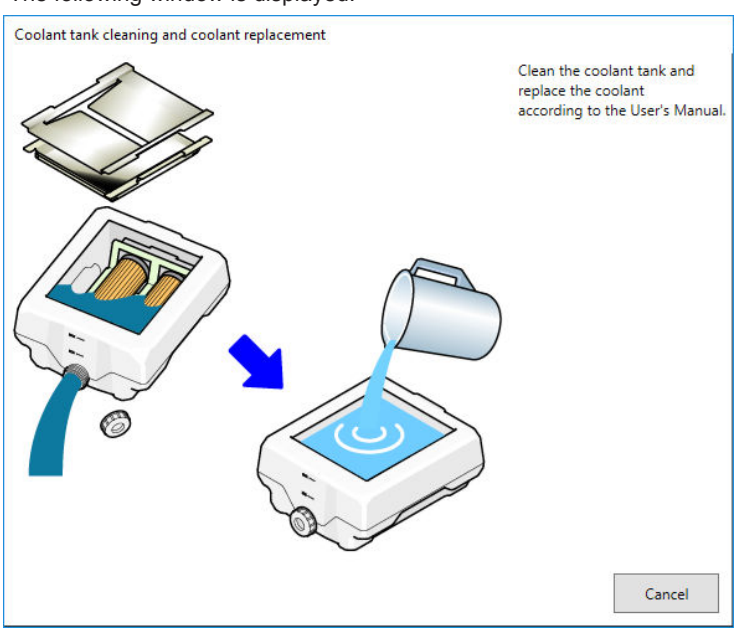

2 **Open the bottom cover.**

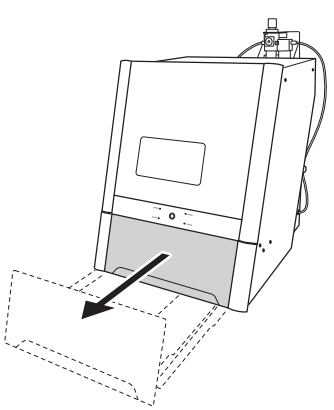

3 **Pull out the coolant tank.**

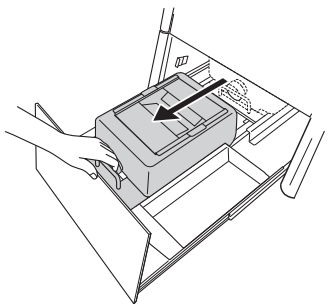

4 **Remove the coolant tank.**

2. Fill the machine with coolant.

1 **Remove the tray and lid of the coolant tank.**

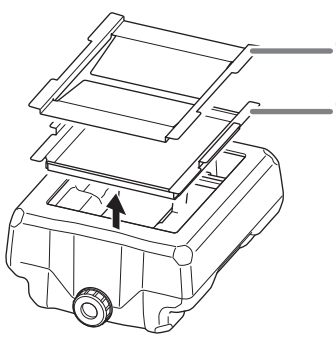

Tray lid

Tray

Lift the lid and the tray together to remove them at the same time.

2 **Install the coolant filters (2).**

Orient the coolant filters so that the end with the protrusion is at the front (the end where the coolant tank cap is not present).

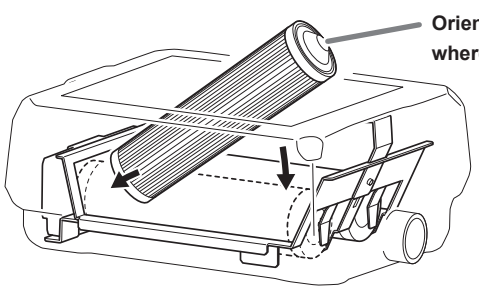

Orient the protrusion at the front (the end where the coolant tank cap is present).

3 Check the tightening of the coolant tank cap.

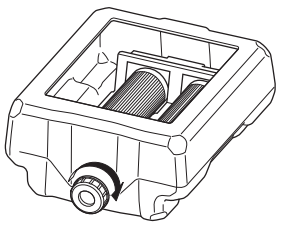

4 Make the coolant.

To make the coolant, mix the water, additive (ZAW-1000D), and chelating reagent (ZCH-250D) at fixed ratios. Use the included measuring cup for measuring.

① **Mix water and additive in the ratio of "95:5" (water:additive).**
There is no need to stir the solution.
The capacity of the coolant tank is approximately 5 L. To fill the tank, use 4,750 ml of water and 250 ml of additive.

② **Mix the water + additive solution and chelating reagent in the ratio of "400:1" (water + additive solution:chelating reagent).**
There is no need to stir the solution.
To fill the tank, use 5,000 ml of water + additive solution and 12.5 ml of chelating reagent.



① **Water:additive = 95:5**
* * When filling the tank: water = 4,750 ml and additive = 250 ml

② **Water + additive solution:chelating reagent = 400:1**
* * When filling the tank: water + additive solution = 5,000 ml and chelating reagent = 12.5 ml

MEMO

The ratios required to create approximately one liter of coolant are written on the label affixed close to the coolant tank.

⚠CAUTION **Be sure to use the specified additive.**
Additives are effective in reducing coolant deterioration and raising the milling efficiency in order to maintain product performance. Furthermore, if additives are not used, the coolant may generate an unpleasant odor.

⚠CAUTION **Be sure to use the specified chelating reagent.**
The chelating reagent works to make calcium and similar substances contained in the water inactive, making it easier to clean off milling powder that adheres to the machine and the cutting tool after milling.

Refer to the appropriate safety data sheet (SDS) for the chemical substances used in the additive and chelating reagent and the safety related to those substances.
To purchase additives, contact your authorized DGSHAPE Corporation dealer or access our website (http://www.dgshape.com/).

Important

Add an additional 12.5 ml of chelating reagent to the coolant if:

- It is easy for milling waste to adhere to the inside of the machine.
- The milling time exceeds 8 hours, regardless of whether milling waste adheres to the machine.

☞ P. 61 “Step 1 : Filling the Coolant Tank”

5 Fill the coolant tank with the coolant.

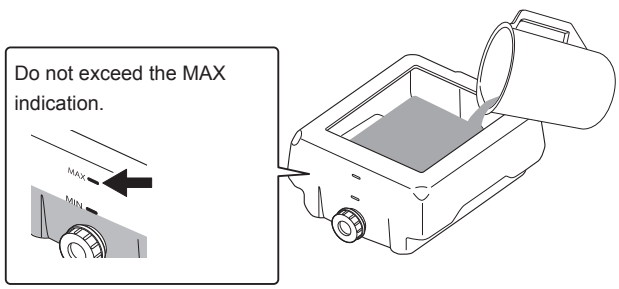

6 After filling the tank with coolant, put the tray and lid on the coolant tank.

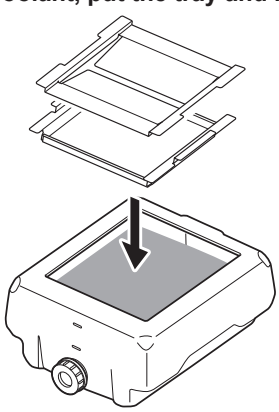

3. Return the coolant tank to its original position.

1 Return the coolant tank to its original position.

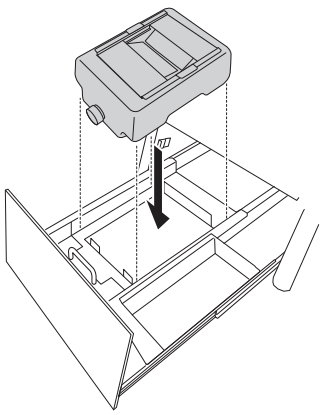

2 Push the coolant tank toward the back of the machine.

Push the coolant tank to the point where you feel a click.

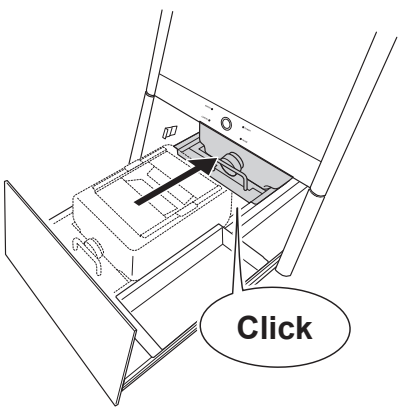

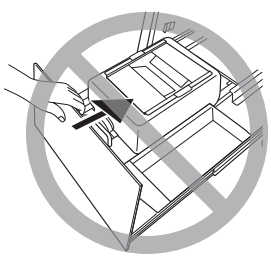

Important

Do not push the tank using the bottom cover.

Point:

Align the ▷ label affixed to the right side of the tank with the ◁ label affixed to the machine.

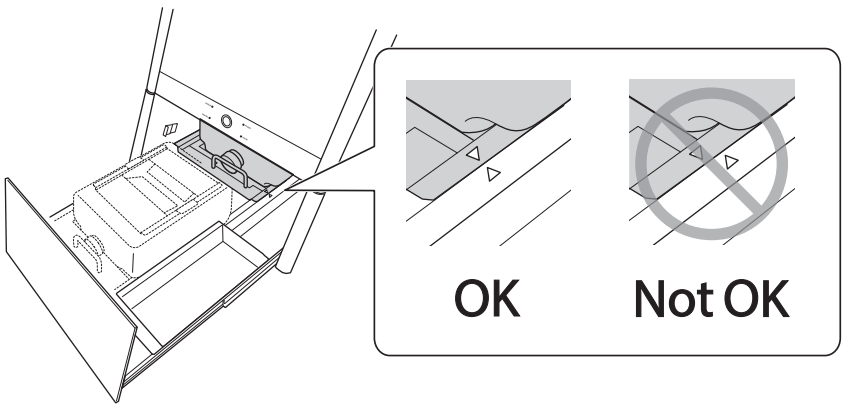

Important

Move the coolant tank slowly. Forcefully moving the coolant tank may cause the coolant to spray out.

3 Close the bottom cover.

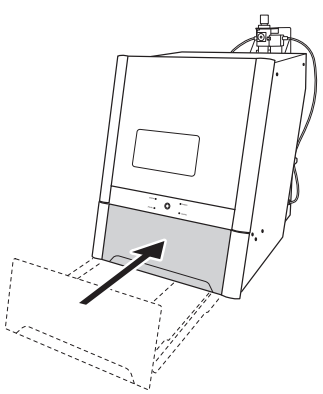

This completes the procedure for filling the coolant tank.
Continue on to “Step 2 : Automatic Correction” (P. 68)

Step 2 : Automatic Correction

Required Tools

Included items			
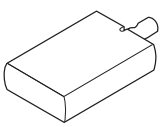	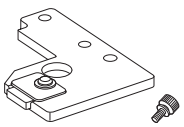	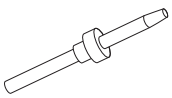	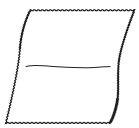
Rotary axis correction jig	ATC magazine correction jig/ A screw	Detection pin for correction	Cloth for care and maintenance

Important

Handle the detection pin for correction and the dummy pin separately to be absolutely sure that you do not confuse them.

If the detection pin for correction is used as the dummy pin even once, the detection pin for correction cannot be used to provide proper correction. If for some reason the detection pin for correction is used as the dummy pin, a new detection pin for correction will be necessary. Contact your authorized DGSHAPE Corporation dealer or access our website (http://www.dgshape.com/).

1. Clean the detection point for use during correction.

1 **Open the front cover.**

2 **Remove all milling burs that have been set.**

MEMO When the milling bur is difficult to remove (using the milling bur removal jig)

When the milling bur is difficult to remove, you can remove it easily by using the milling bur removal jig.

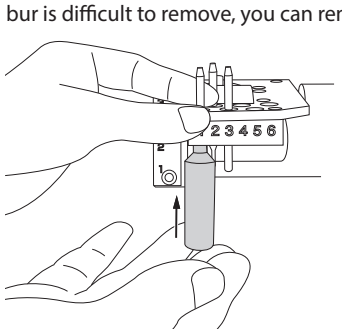

Insert the tip of the milling bur into the tip (the narrow end) of the milling bur removal jig, and then push the milling bur up.

⚠CAUTION **Caution: Be careful around the tip and other sharp edges.**
Doing so may cause injury.

❸ **Use the cloth for care and maintenance to wipe the locations shown in the following figures clean of fluid and dirt.**

If any fluid or dirt is present in these locations, correction might not occur properly.

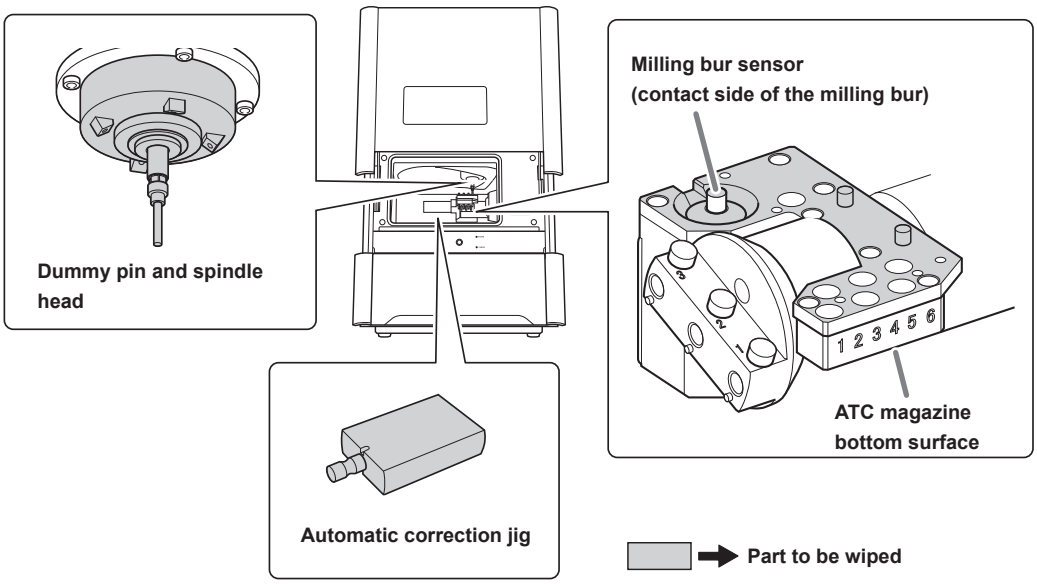

2. Attach the automatic correction jig.

❶ **Attach the ATC magazine correction jig.**

❷ **Push the detection pin for correction as far as it will go into stocker number 4 in the ATC magazine.**

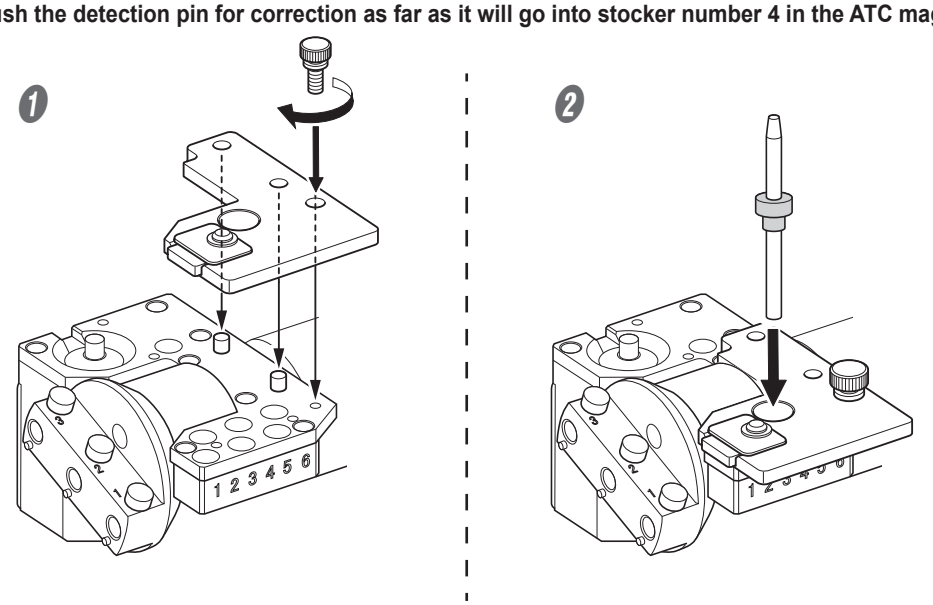

Important

The tapered (slanted) end is the top of the detection pin for correction. Be careful not to confuse which side is up and which is down.

3 **Attach the rotary axis correction jig to hole “2” on the rotary axis.**

① **Align the recessed portion of the jig with the protrusion on the rotary axis, and then insert the jig.**

Ensure that there is no gap between the surfaces. It does not matter which of the two recesses on the jig is aligned to the protrusion.

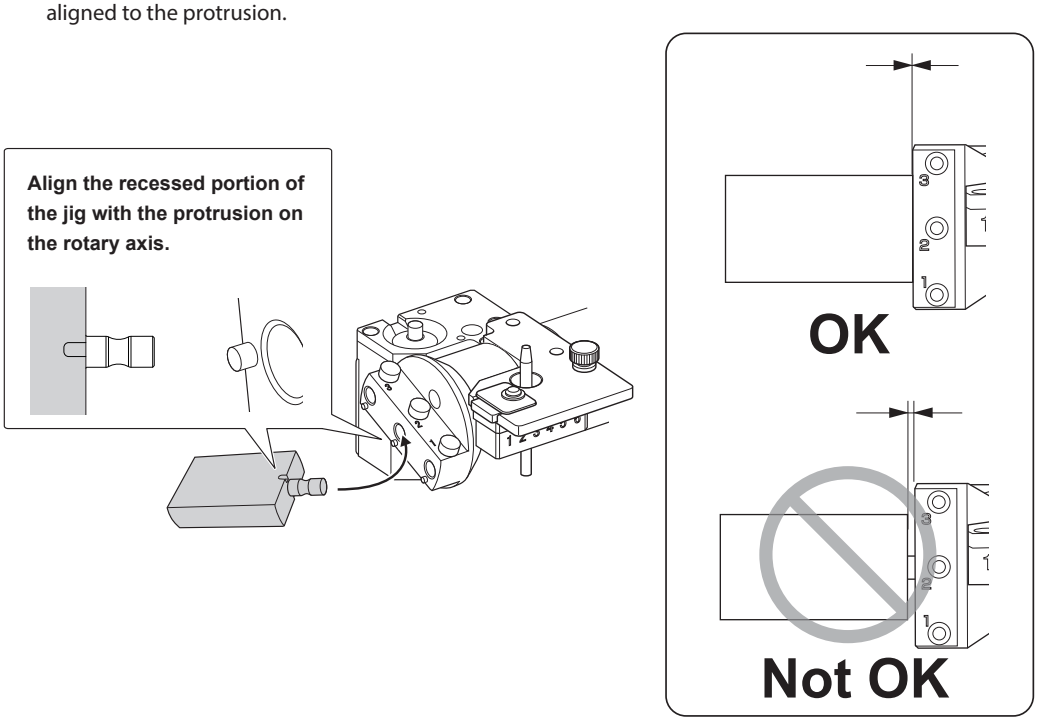

② **Use a hexagonal screwdriver to secure the jig in place with a mounting screw.**

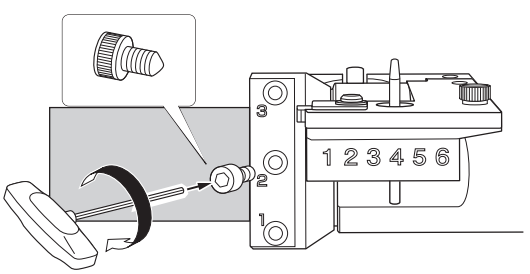

4 **Close the front cover.**

3. Start automatic correction.

MEMO

If the display under [MAINTENANCE] in VPanel is as shown below, ignore it at this point. This indication is handled by P. 73 "Step 3 : Spindle Run-In (Long)" which will be carried out after this procedure.

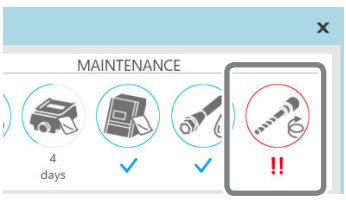

1 **Click**  **.**



2 **Click the [Maintenance] tab, and then click [Automatic correction].**

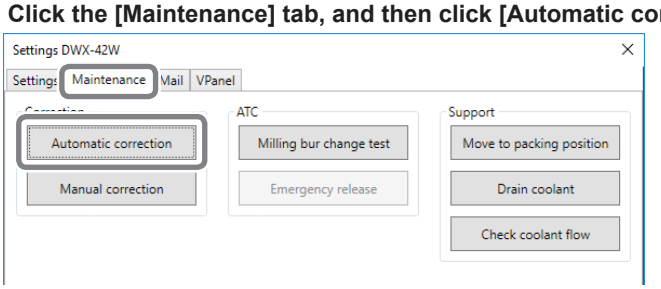

The following window is displayed automatically.

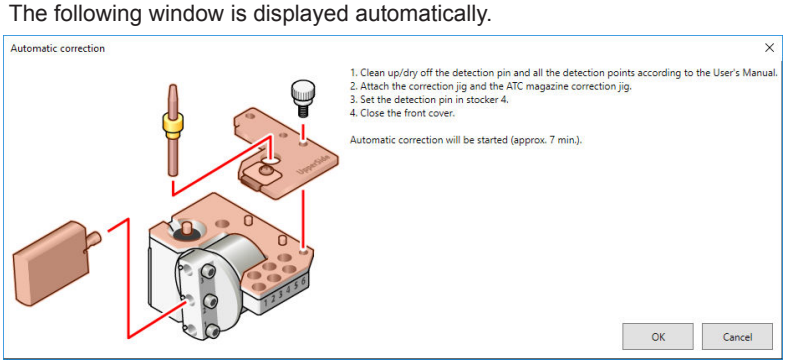

3 **Check that the work displayed on the screen is complete.**

4 **Click [OK].**

Automatic correction starts. The machine status light will flash blue. The remaining work time will be displayed on VPanel.

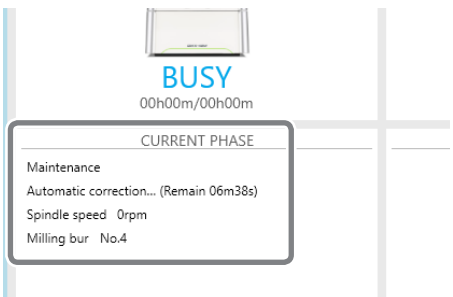

The automatic correction is finished when the message shown in the figure is displayed.

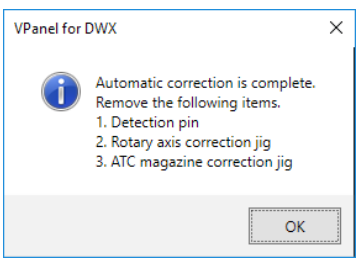

5 **Click [OK].**

6 **Open the front cover.**

7 **Remove the correction pin and jig.**

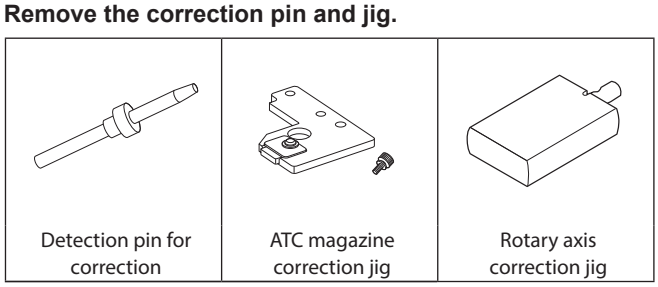

8 **Close the front cover.**

Continue on to “STEP 3: Spindle Run-in (Long).”

Step 3 : Spindle Run-In (Long)

Procedure

1 **Close the front cover.**

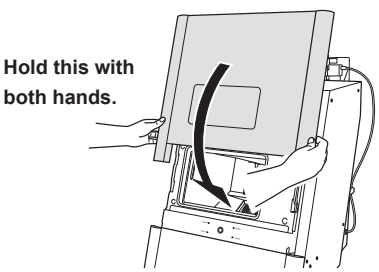

MEMO

If a window prompting you to perform collet maintenance is displayed, do so according to the user's manual.

2 **Click** ⚙ **.**



MEMO

If the display under [MAINTENANCE] in VPanel is as shown below, click . Clicking this icon displays the same window as clicking [Spindle run-in (long)] in step **3**. Proceed directly to step **4**.

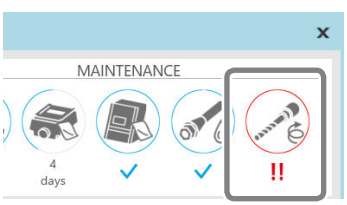

3 **Click the [Maintenance] tab, and then click [Spindle run-in (long)].**

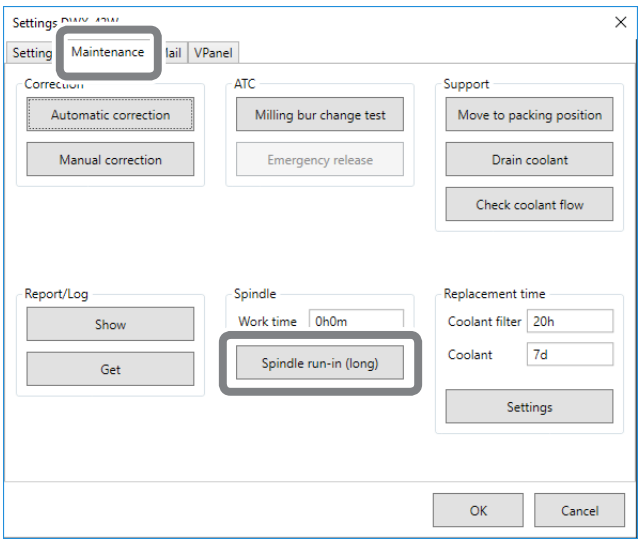

The following window is displayed.

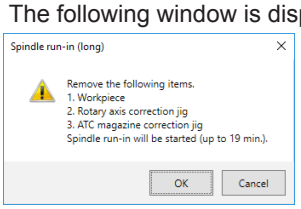

4 **Remove the workpiece, rotary axis correction jig, and ATC magazine correction jig if they are attached.**

5 **Click [OK].**

6 **Open the front cover.**

The following window is displayed.

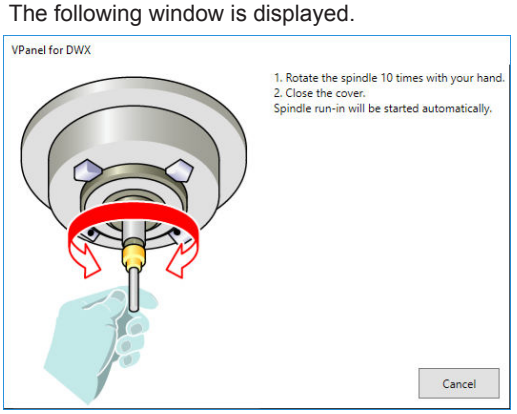

7 **Spin the spindle around 10 times in either direction by hand.**

8 **Close the front cover.**

Spindle run-in will begin. The machine status light will flash blue. The remaining work time will be displayed on VPanel.



When the message in the figure is displayed, click [OK].

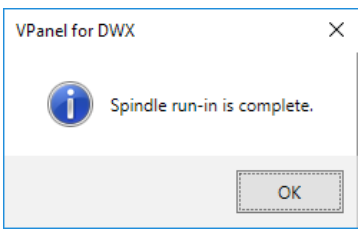

3. Appendix

Specifications.....78
Power Rating and Serial Number Location 78
Coordinates 78
Dimensional Drawings.....79
Specifications 81

Specifications

Power Rating and Serial Number Location

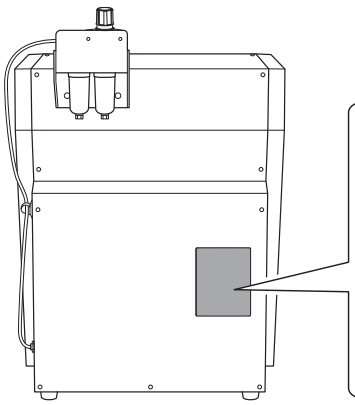

Serial number
The serial number is required for maintenance, servicing, and support. Never peel off the label.

Power rating
Use an electrical outlet that meets the ratings for voltage, frequency, and current given here.

Coordinates

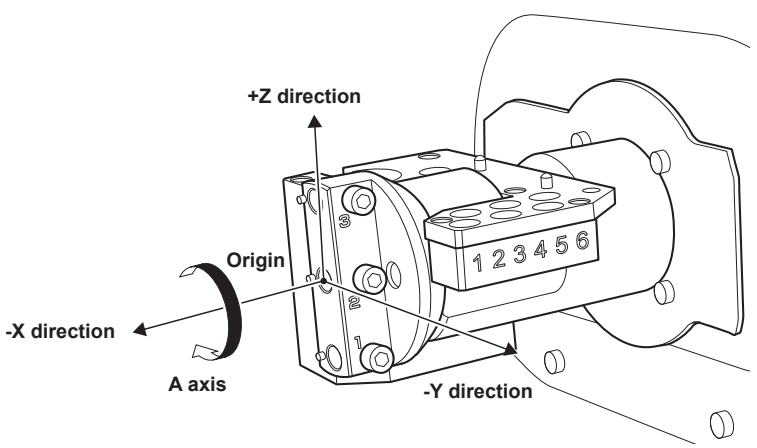

Dimensional Drawings

Machine Dimensions

Unit: mm (in.)

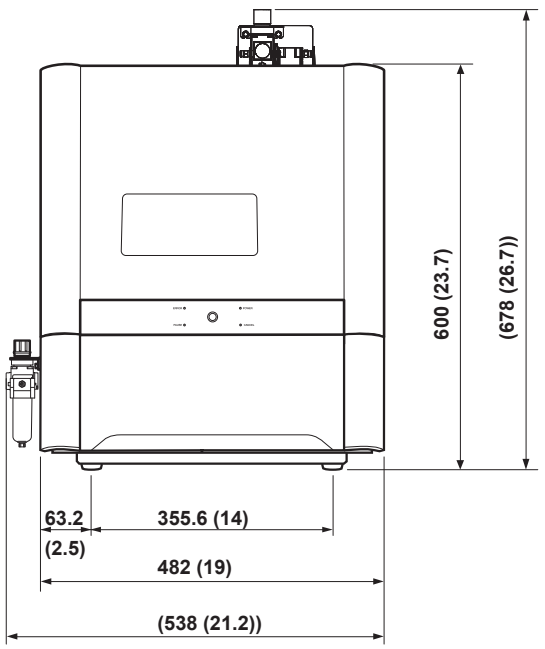

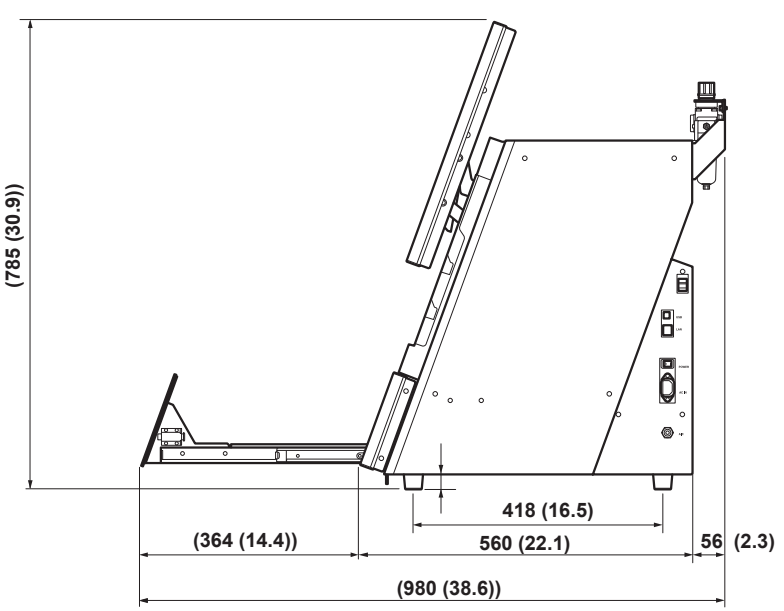

Detection Pin for Correction/Dummy Pin Dimensions

Unit: mm (in.)

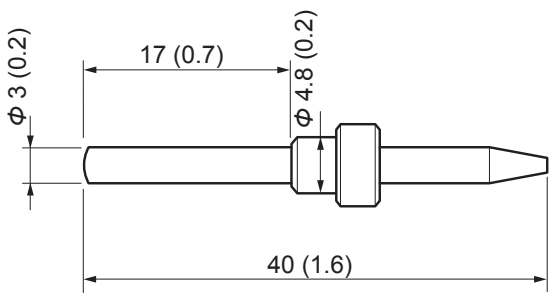

Workpiece Mounting Part Dimensions

Unit: mm (in.)

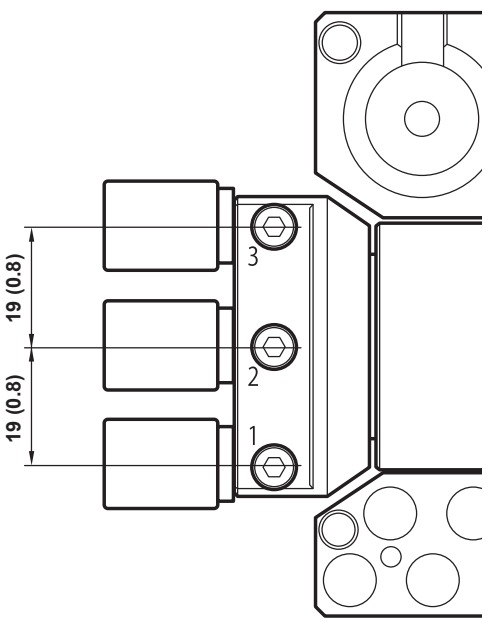

Specifications

	DWX-42W	
Millable material*	Glass ceramics, composite resins, PMMA	
	Pin type	Width × depth × height: max. 40 × 20 × 20 mm (1.5 × 0.8 × 0.8 in.)
Operating speed	XYZ: 6 to 1800 mm/min (0.24 to 70.9 in./min.)	
Spindle speed	15,000 to 60,000 rpm	
Rotary axis travel angle	A: ±360°	
Number of milling burs housed	6	
Attachable milling bur	Shank diameter: 3 mm, dedicated milling bur	
Compatible compressed air	0.18 to 0.22 MPa	
Interface	USB	
	Ethernet (10 BASE-T/100 BASE-TX automatic switching)	
Control command sets	RML-1, NC code	
Power requirements	AC 100 to 240 V ± 10%, 50/60 Hz (overvoltage category: II, IEC 60664-1), 2.1A	
Power consumption	Approx. 190 W	
Operating noise	During operation: 70 db (A) or less (when not cutting) During standby: 48 dB (A) or less	
External Dimensions	Width × depth × height: 482 × 560 × 600 mm (19.0 × 22.0 × 23.6 in.)	
Weight	61 kg (135 lb.)	
Installation environment	Indoor use at altitudes up to 2000 m Temperature: 5 to 28°C (41 to 82°F) Humidity: 35 to 80%RH (no condensation) Ambient pollution degree: 2 (as specified by IEC 60664-1) Short-term temporary overvoltage: 1440 V Long-term temporary overvoltage: 490 V	
Included items	Power cord, USB cable, manuals, software CD, automatic correction jig, milling burs, hexagonal screwdriver, etc.	

* Even when made from the described materials, some workpieces cannot be milled due to specifications or physical properties. For more information, contact your authorized Roland DG Corporation dealer.

For China

产品中有毒有害物质或元素的名称及含量

部件名称	有毒有害物质或元素					
	铅(Pb)	汞(Hg)	镉(Cd)	六价铬(Cr(VI))	多溴联苯(PBB)	多溴二苯醚(PBDE)
印刷电路板	×	○	×	○	○	○
头部	×	○	○	○	○	○
壳体、底架	×	○	○	○	○	○
电源	×	○	×	○	○	○
其他（电缆、附件等）	×	○	○	○	○	○

○：表示该有毒有害物质在该部件所有均质材料中的含量均在 GB/T26572-2011 标准规定的限量要求以下。

×：表示该有毒有害物质至少在该部件的某一均质材料中的含量超出 GB/T26572-2011 标准规定的限量要求。

环保使用期限



此标志适用于在中国国内销售的电子信息产品，表示环保使用期限的年数。
所谓环保使用期限是指在自制造日起的规定期限内，产品中所含的有害物质不致引起环境污染，不会对人身、财产造成严重的不良影响。
环保使用期限仅在遵照产品使用说明书，正确使用产品的条件下才有效。
不当的使用，将会导致有害物质泄漏的危险。

For EU Countries



This product must be disposed of separately at your local waste recycling center. Do not dispose of in household waste bin.



Bitte führen Sie dieses Produkt separat Ihrer örtlichen Entsorgungsstelle zu. Bitte nicht mit dem normalen Hausmüll entsorgen.



Ne jetez pas le produit avec vos ordures ménagères. Portez-le dans un centre recyclage des déchets.



Questo prodotto deve essere smaltito negli appositi contenitori per la raccolta differenziata, non buttare nel cestino dei rifiuti casalinghi.



Este producto debe devolverse al centro de reciclaje más cercano a su domicilio para su correcta eliminación. No lo tire a la basura.



Deite fora separadamente este produto no seu centro de reciclagem local. Não o deite fora no seu caixote do lixo.



Lever dit product in bij een lokaal afvalverzamelpunt. NIET met normaal huishoudelijk afval afvoeren.



Dette Produkt skal smides særskilt væk på den lokale affalds- og genbrugsstation. Må ikke smides ud sammen med almindeligt husholdningsaffald.



Tätä tuotetta ei saa hävittää normaalien talousjätteiden mukana, vaan se on toimitettava ongelmajätteiden keräilypisteeseen hävitettäväksi.



Produkten måste kasseras separat på din lokala återvinningscentral. Släng inte produkten tillsammans med hushållssoporna.



Μην πετάξετε το αντικείμενο αυτό στο καλάθι των απορριμμάτων. Αφαιρέστε τις μπαταρίες και προσκομίστε το στο τοπικό κέντρο ανακύκλωσης.